KCW® fixing technology

FIXING TECHNOLOGY

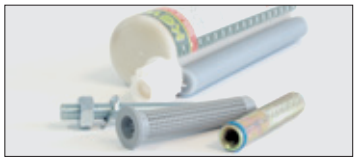
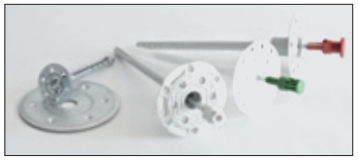

KCW® Quality

International Catalogue 10d

... better products, easier life

KCW® DÜBEL

General Fixings Page 15 - 30

Frame Fixings Page 31 - 46

Cavity Fixings Page 47 - 54

Heavy Duty Metal Fixings Page 55 - 60

Chemical Fixings Page 61 - 70

Insulation Material Fixings Page 71 - 84

Scaffold Fixings Page 85 - 88

Remedial Fixings Page 89 - 90

Electrical Fixings Page 91 - 94

Heating and Sanitary Fixings Page 95 - 98

Accessories Page 99 - 102

Self Service Range Page 103 - 125

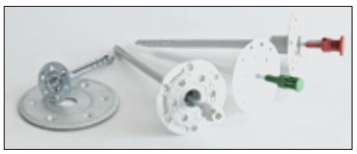

KCW

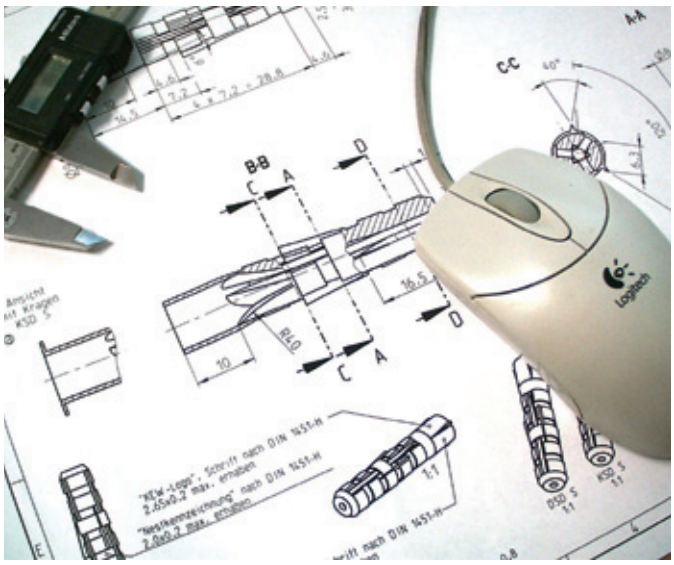
BB
CC
AA
Logitech

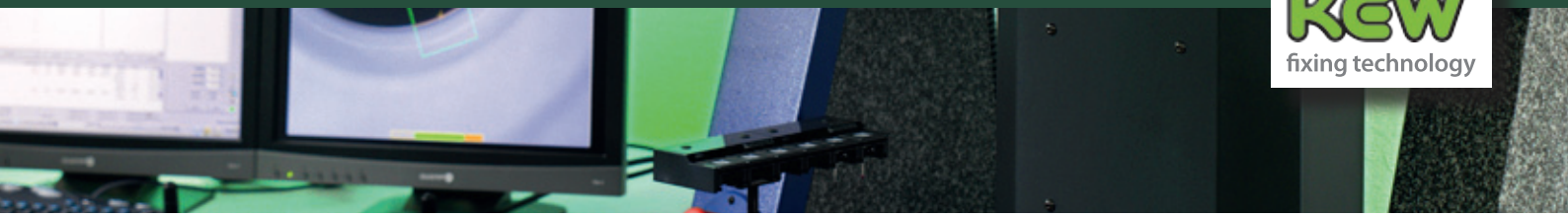

Our successful story started in 1955 with metric screws made of plastic and continued 1958 by the start of series production from high quality nylon plugs and in 2015 it marks the 60th time - the KEW fastening technology.
For 60 years serving our customers means to us at the same time daily Exposure (daily motivation) and challenge to give to you, our Partners, the best possible mounting solutions available to make that fix your mounting problems efficiently.

Based in Wilthen/Sachsen, we traditionally and successfully run all our sections from research and development, production and tool manufacturing up to distribution with our own employees.

We are your reliable partner, able to react at short notice, individually responding to customers' requirements and our competent team is prepared to support you with the best possible efficiency.

You will find all information about our scope of services clearly arranged and concise in this catalogue. Due to its clear layout it will be a valuable helper in selecting the right products and services.

Individual contact to our business partners is of highest importance for us. Thus, should you have any questions, please do not hesitate to call us! Our sales team is happy to assist you with indoor or field service in any possible way.

We are looking forward to continuing the successful cooperation with you!

KEW®
Kunststofferzeugnisse GmbH Wilthen

E. Gedan	A. Gedan
managing partner	managing director sales & marketing

Historical development of the KEW® fixings

1958	The invention - called Nylon expansion plugt	„Igel“	
1970	Expansion plug with collar	„A-Plug“	
1978	Push-through and rimmed expansion plug	„B-Plug“	„C-Plug“
1978	Expansion socket	„KEW SP“	
1979	Cast-in plug	„E-Plug“	
1980	Foldable plug for aircrete	„G-Plug“	
1981	Nail plug	„ND-Plug“	
1988	Universal plug	„U-Plug“	
1990	Improvement of the push-through and rimmed plugs "B" and "C" to become	„KEW DSD“	„KEW KSD“
1993	KEW Universal plug with and without collar, made of polyethylene (PE)	„KEW UDD“	„KEW UKD“
1993	Improvement of the nail plug "ND" to become	“KEW ND S“	“KEW ND Z“
1996	KEW insulation plug with plastic or metal expansion naill		„KEW DSH“

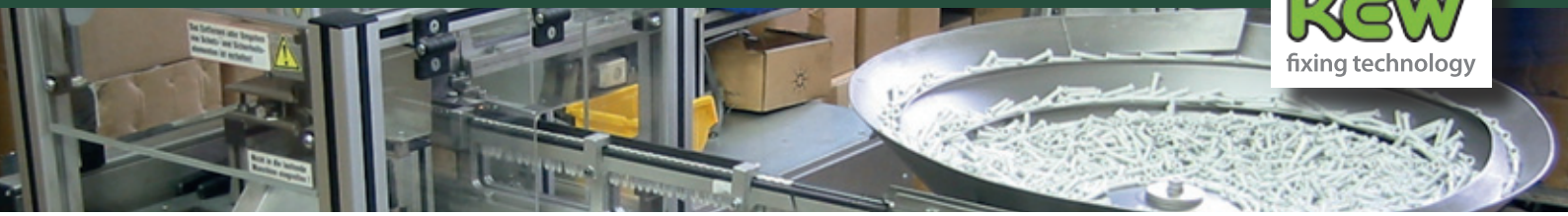

Historical development of the KEW® fixings

1997 Improvement of the push-through plug "DSD S" to become

„KEW DSD Super“

„KEW KSD Super“

1998 KEW frame plug with standard and extended expansion area, based on the KEW push-through plugs

„KEW RD“

„KEW RDD“

2001 KEW scaffolding plug with expansion area based on the KEW push-through plug

„KEW GD“

2001 KEW "thermo" Hammer fixing with expansion area based on the KEW push-through plugs

„KEW TSD“

2002 KEW plug with extended expansion area based on the KEW push-through plug

„KEW LSD“

2002 KEW "Super" universal plug with expansion area based on the KEW push-through plug

„KEW SU D“

„KEW SU K“

2003 KEW - Thermo Hammer fixing with plastic nail

„KEW TSD KN“

2007 KEW - Thermo fixing Screw

„KEW TSBD“

2007 KEW-Universal Insulation Disk

„KEW UDS“

2008 KEW-thermo Hammer fixing for assembly on surface level

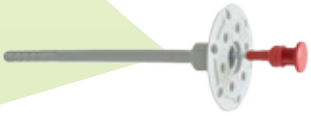

„KEW TSD-V“

2008 KEW-Frame Plug mit with standart and extendet expansion area with ETA

„KEW RDD“

Comparison

Expansion body of double and triple-split design

Double-split design

Expansion in **two** directions only

Load is directed into **two** directions only

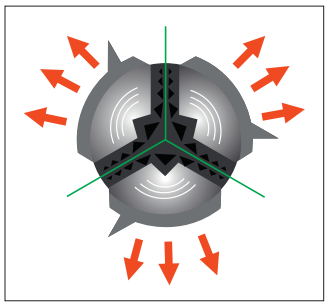

- Evenly sharing high effect of the pressure-force
- Optimal and centric guidance of the screw low torque
- high savety against pulling

KEW triple-split design

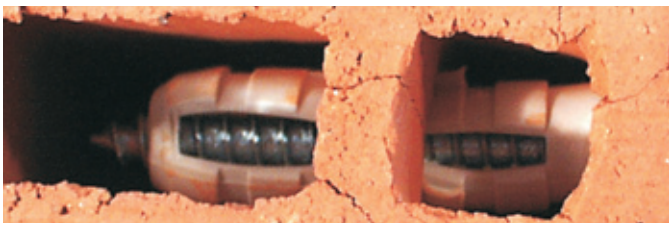

Expansion in **three** directions and **two** areas

Contraction in **two** areas
Contraction plus forming a strong knot

Load distribution in **three** areas
Screw can be turned in easier and faster

Influence of the double-split and triple-split design types on tightening of screw and pullout loadse

Tightening force required

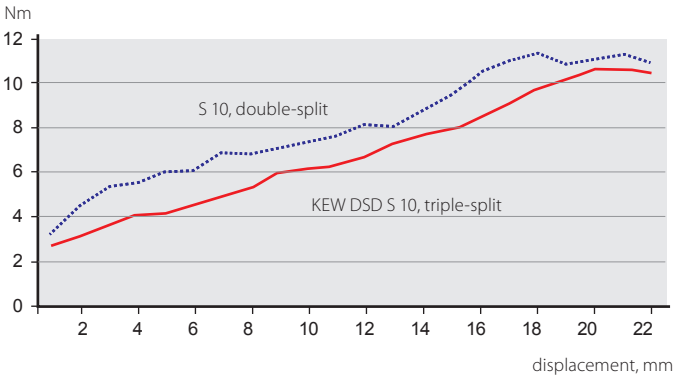

Pullout loads achieved

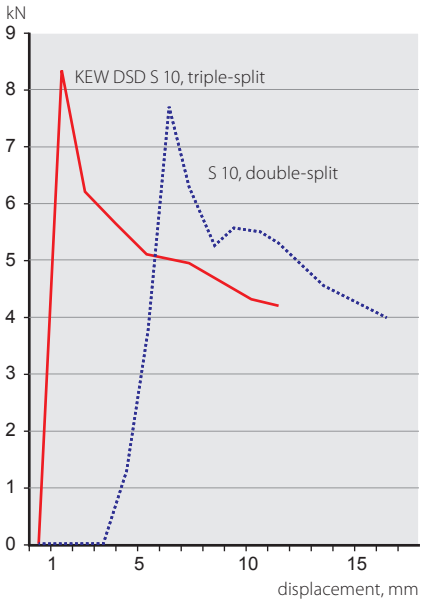

It can clearly be seen that the KEW design combines the **lowest required tightening forces** with the **highest achieved pullout loads**. The values were found with plugs made of saturated (conditioned) polyamide (nylon) installed in concrete B25.

Basics of the Fixing Technology

1. building materials

1.1 Concrete and Masonry (solid)

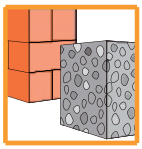

1.1.1 Concrete

Concrete is a mixture of cement,aggregate, and water. There are various types of concrete depending on composition, mode of production or useage.There are two basic types, i.e. normal concrete and light concrete. Different from normal concrete, light concrete contains aggregate such as pumice or styrofoam.Cement serves as binding agent and is contained in both types of concrete.
Pumice/ styrofoam aggregate are often of lower strength than gravel aggregate which may lead to partly unfavourable conditions for an efficient anchorage.
In addition, the European Technical Approval (ETA) differentiates between cracked and uncracked concrete.

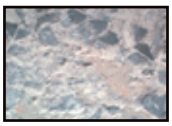

(normal) concrete

1.1.2 Masonry, Dense and Solid

These bricks normally are of limited size and do not have cavities. The group includes solid brick, clay bricks, as well as solid sand-lime stones. Being solid, whithout cavities and of high compressive strength this base material is very well suited for anchorings.

solid masonry
("clincker brick")

1.2.3 Masonry, Porous and Solid

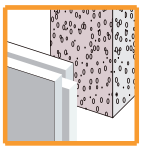

Due to their porous condition solid bricks made of light concrete or aircrete are of lower compressive strength. This requires a plug with long expansion area or an undercut anchor system.

aircrete ("Ytong", Siporex",
"Hebel", "Durox", "Greisel")

1.3 Perforated and Hollow Blocks

1.3.1 Dense Perforated and Hollow Blocks

Hollow blocks are perforated either vertically or horizontally. The base material is mainly the same as with solid blocks. The cavities are mostly of circular, square or elliptical shape whereby the total cross section of the cavities amounts to more than 15% of the loaded surface. This group includes perforated bricks, hollow and perforated blocks made of sand lime as well as hollow blocks made of concrete. To fix safely into such material it is advised to use plugs which can fill up or bridge the cavities.

Hollow sand-lime block/
Hollow clay block

1.3.2 Porous Perforated and Hollow Blocks

Perforated bricks and hollow blocks made of light concrete may be porous and include cavities. Such low compressive strength base material requires the fixing element to be chosen very carefully. This is why it is recommended to use plugs with a long expansion area or undercutting injection systems.

porous perforated brick
("Unipor","Poroton")

1.4 Boards/ Panels

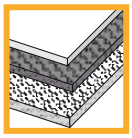

This group comprises thin and quite often also relatively soft material such as gypsum board, plasterboard, chipboard, hardboard, plywood. The panels are either directly attached to the base material or fixed at a distance. Only special formlocking fixings can be used which deform to attach to the rear side of the panel.

prefabricated building materials
(plasterboard panels, gypsum fibreboard,
chipboard, hard particle board and plywood)

Basics of the Fixing Technology

2. The Right Drill Hole

It must be made sure to only drill perpendicularly to the surface of the base material and to use drill bits which do not exceed the standardized drill diameter tolerances.
The drill dust must be removed and the hole be thoroughly cleaned. Given drill diameters and drill depths must be observed. Do not use percussion drill bits for boards and panels. Please note that the base material also determines the drilling method.

2.1 From the Drill Hole to the Base Material...

Often it is not known which base material is to be found below the render or the wall paper. In this case a small hole should be drilled at low speed and without percussion. The drilling resistance shows whether or not there is a hard material. Type and colour of the drill dust also may help to determine the base material.

- **Concrete:**
  Dry, white or light grey powder.
- **Aircrete:**
  White, granular, slightly greasy powder.
- **Brick, Masonry:**
  Red powder, in case of hollow block the bit progresses in steps through cavities.
- **Sand-lime Stone:**
  White, sandlike powder
- **Gypsum Plasterboard:**
  White, light powder tending to stick to the drill bit.
- **Gypsum Fibreboard:**
  Grey, light powder tending to stick to the drill bit.

2.2 ... from the Base Material to the Drilling Method

- **Rotary Drilling:**

Advised for soft and porous base materials of low compressive strength (ex.: aircrete, perforated bricks). Turn off percussion/ hammering action to avoid drilling too big or to damage inner sections of the base material.

- **Rotary Percussion Drilling:**

Advised for solid and dense materials such as solid bricks and masonry. More frequent but low energy percussions are added to fast rotation.

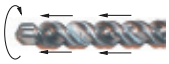

- **Hammer Drilling:**

Hammer drilling is advised for concrete. High impact energy combined with less impacts ensure fast drilling progress.

3. Installation

3.1 Types of Installation:

- **Pre-Installation:**

The anchor must be installed flush with the surface of the base material. The drill diameter is larger than the hole through the fixture to be attached. The drill hole is made first, then the anchor is installed and finally the fixture is attached.

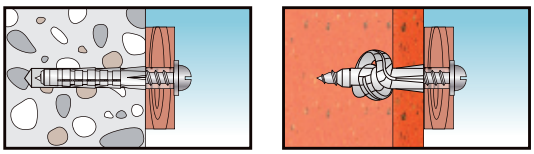

KEW SUPER Universal plug - SU

- **Push-Through Installation:**

Drill hole is mostly drilled through the fixture, so that plug and drill diameter are identical which ensures faster installation and more accurate positioning of the drill hole.
The plug is pushed through the fixture into the drill hole.

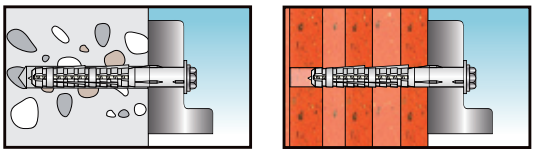

KEW frame plug, double expansion zone-RDD

- **Stand-Off Installation**

The fixture is anchored at a certain distance from the base material and has to support push and pull-forces.

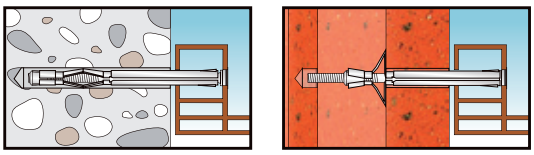

KEW window frameplug Combi-FRD C

Basics of the Fixing Technology

3.2 Fixing Thickness

The fixing thickness generally corresponds to the thickness of the object to be fixed. If the plug is preinstalled sufficient flexibility is provided by chosing the length of the screw.In case of a through-fixing the length of the plug determines the fixing thickness.
In case of substrates covered with render or insulating material the fixture thickness must be increased correspondingly.

3.3 Anchorage Depth

In general, the anchorage depth is the distance between the tip of the expansion part of the plug and the upper edge of the load bearing base material.

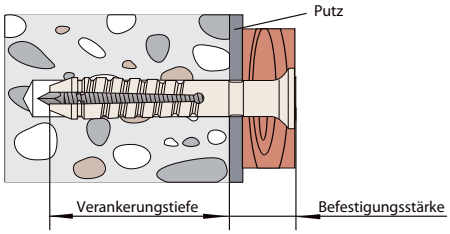

4. Types of Anchorage

- **Anchorage by Friction:**

The expansion part of the plug is firmly pressed against the based material. Axial loads applied to the plug are transmitted by friction.

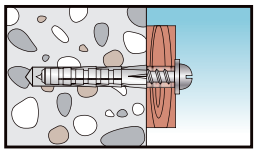

- **Anchorage by Form Locking:**

The plug adopts the shape of the drill hole or interlocks with the materials' surface.

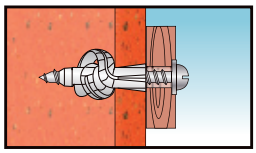

- **Anchorage by Bonding:**

The fixture is firmly bonded to the base material by means of synthethic mortar or resin. This expansion and stress-free anchorage guarantees highest load bearing capacities.

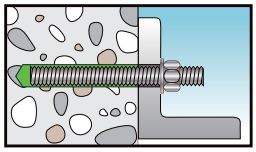

KEW threaded stud - VG
KEW anchor capsule - VAP

5. Types of Failure

- **Anchor Pullout:**

The anchor is pulled out of the drill hole without damaging the base material.
Cause: · too high load
· ncorrect installation

- **Failure of the Base Material:**

Depends mainly on the strength of the base material and the anchorage depth.
Cause: · too high load
· insuffient strength of the base material
· insufficient anchorage depth

- **Splitting of the Base Material:**

Splitting is a special type of concrete failure.
Cause: · too small dimensions of base material part.
· too small edge distances or axial spacings

- **Steel Failure:**

Steel failure can be calculated based on steel strength and cross section of the steel part. Steel failure is the maximum anchor load that can be reached.
Cause: · insufficient strength of screw or threaded stud.

6. Types of Load

Dimensions and type of base material, type and direction of load determine the type of plug to be used.
The loads are characterized by:
- **actual load**
- **load direction**
- **point of load introduction**

The forces are stated in kN (1 Kilonewton - 1 kN = 100 kg) bending moments are stated in Nm (1 Newtonmeter - 1 Nm= 0,1 kpm).

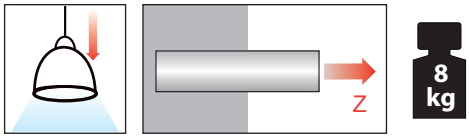

Tension Load
= 80 N

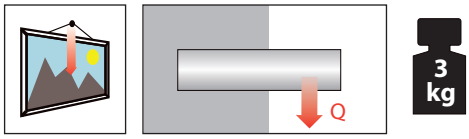

Shear Tension
= 30 N

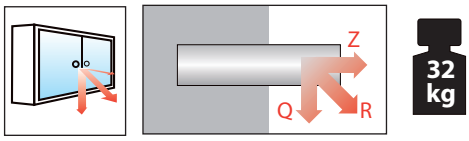

Oblique Tension
(Tension +
Shear Tension)
Z = 90 N, Q = 310 N
R = 323 N

Range of Applications

			page	concrete	natural stone	solid bricks Mz, KS	aircrete (aerated cement)	solid gypsum plates	hollow bricks Hlz, KSL	hollow blocks Hbl	gypsum plasterboard	Plates / panels
Allgemeine Befestigungen												
Expansion plug SUPER	SD S		16	■	■	■	■	■	□	□		
Universal plug SUPER	SU		18	■	■	■	■	■	■	■	■	■
Universal plug	UD		21	■	■	■	■	■	■	■	■	■
Extended expansion plug	LSD		23	■	■	■	■	■	■	■		
Expansion socket	SP		24	■	■	■	□	□	■	■	■	■
Aircrete plug	GBD		25				■					
Aircrete plug	G7		26				■					
Brass plug	MSD		27	■	■	■	□	□				
Metal universal plug	MUD		28	■	■	■	■	■	□	□		
Ceiling nail	DN		29	■								
Resin plug	KND		30	■	■	■	■	■	■	■	■	■
Rahmen - Befestigungen												
Nail plug	ND		32	■	■	■	□	■	□	□		
Frame plug	RD		35	■	■	■	□	□				
Frame plug, Extended expansion area	RDD		37	■	■	■	■	■	■	■		
Window frame screw	FRS		41	■	■	■	□	■	■	■		
Window frame plug	FRD		42	■	■	■	□	■	□	□		
Window frame plug Combi	FRD C		44	■	■	■	■	■	■	■		
Adjusting wedge	BMK	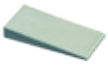	45									
Spacer Unit	ASH		45									

■ geeignet □ bedingt geeignet ⧈ geeignet in Kombination

Range of Applications

			Page	Concrete	Natural stone	Solid bricks MZ, KSV	Aerated concrete (Gasbeton)	Solid gypsum plates	Hollow bricks Hlz, KSL	Hollow blocks Hbh, KSL	Gypsum plasterboard	Plates/Tafeln
Cavity Fixings												
Metal hollow wall plug	MHD		48						□	□	■	■
Nylon hollow wall plug	KHD		50	□	□	□	□	□	□	□	■	■
Spring toggle	FK		51								■	■
Plasterboard plug	GKD		52								■	
Metal plasterboard plug	GKDM		53								■	□
Stud anchor	S-KA		54	■								
Stud anchor	S-KAH		54	■								
Stud anchor	B-U		54	■								
Injection mortar cartridge	VM		60	■	■	■	□	■	■	■		
Perforated sleeve	VG		61						■	■		
Threaded stud	VSH		64	⧈	⧈	⧈	⧈		⧈	⧈		
Threaded sleeve	VIG		64	⧈	⧈	⧈	⧈		⧈	⧈		
Dispenser guns	VKP		65									
Chemical anchor capsule	VAP		67	■	■							
Chemical anchor studs	VAS		67	⧈	⧈							

Range of Applications

			page	concrete	natural stone	solid bricks Mz, KS	aircrete (aerated cement)	solid gypsum plates	hollow bricks Hlz, KSL	hollow blocks Hbl	gypsum plasterboard	Plates / panels
Insulation Material Fixings												
Hammer fixing	TSDL-V		72	■	■	■	□		■	□		
Hammer fixing	TSD-V KN		73	■	■	■	□		■	□		
Hammer fixing	TSD-V		74	■	■	■	□		■	□		
Hammer fixing	TSD		75	■	■	■	□		■	■		
Screw fixing	TSBD		76	■	■	■	□		■	■		
Hammer fixing	DSH K		77	■	■	■	□		□	□		
Metal insulation fixings	MDSH		79	■	■	■	■		□	□		
Metal insulation disk	MDSB		80	⧈	⧈	⧈	⧈		⧈	⧈		
ISO Plug	ID		81									
Universal insulation disk	UDS		82	⧈	⧈	⧈	⧈		⧈	⧈		
Insulation disc	DSB		83	⧈	⧈	⧈	⧈	⧈	⧈	⧈	⧈	⧈
Railsocket connector	SSV		83									
Scaffold Fixings												
Scaffold plug	GD		86	■	■	■	□		□	□		
Eye screw	GS		86	⧈	⧈	⧈	⧈		⧈	⧈		
Cover cap	GST		86									

■ geeignet □ bedingt geeignet ⧈ geeignet in Kombination

Range of Applications

			page	concrete	natural stone	solid bricks Mz, KS	aircrete (aerated cement)	solid gypsum plates	hollow bricks Hlz, KSL	hollow blocks Hbl	gypsum plasterboard	Plates / panels
Sanierung												
Masonry wedge	MWK		90									
Masonry injector	MIN		90									
Elektro - Befestigungen												
Cable tie	KEW KB		92									
Fixing socket	BS D		92									
Kabelbinderauflage	KB A		92									
Kabelverbinder	KB V		92									
Tool for cable tie	KB Z		92									
Cable clasp	KKB		92	⧈	⧈	⧈	⧈	⧈	⧈	⧈	⧈	⧈
Nail disc	NSB		92			□	□	□	□	□	□	□
Nail clamp	NS		93			□	□	□	□	□	□	□
Cable harness	KSH		93	⧈	⧈	⧈	⧈	⧈	⧈	⧈	⧈	⧈
Pipe clamp	RS		93	⧈	⧈	⧈	⧈	⧈	⧈	⧈	⧈	⧈
Cable tie loop	VV		94									
Cable strap	SS		94	■	■	■	■	■	□	□		

Range of Applications

			page	concrete	natural stone	solid bricks MZ, KSV	aircrete (aerated cement)	solid gypsum plates	hollow bricks Hlz, KSL	hollow blocks Hbn, KSL	gypsum plaster board	Plates / panels
Washbasin fixing	WTB		96	■	■	■	■	■	□	□		
Washbasin fixing	WTB		96						□	□		
Urinal fixing	UB		96	■	■	■	■	■	□	□		
Washbasin/urinal fixing	WTUB		96	■	■	■	■	■	□	□		
WC fixing	WCB		96	■	■	■	■	■	■	■	■	■
Mirror fixing	SB		96	■	■	■	■	■	□	□		
Pipe hook	RH		96	■	■							
Clip	Clip		96									
Stud screws	STS		97	⊡	⊡	⊡	⊡	⊡	⊡	⊡		
Long hexagon nut	LM		97									
Threaded stud	GWS		97	⊡	⊡	⊡	⊡	⊡	⊡	⊡	⊡	⊡
Pipe clamp PRAKTIC	RSP		97	⊡	⊡	⊡	⊡	⊡	⊡	⊡	⊡	⊡
Pipe clamp PRAKTIC Gleit	RSP G		97	⊡	⊡	⊡	⊡	⊡	⊡	⊡	⊡	⊡
Threaded pipe clamp	RSS		97	⊡	⊡	⊡	⊡	⊡	⊡	⊡	⊡	⊡
Rail bracket	SK		98	⊡	⊡	⊡	⊡	⊡	⊡	⊡	⊡	⊡
Bracket base plate	KGP		98	⊡	⊡	⊡	⊡	⊡	⊡	⊡	⊡	⊡
Rail connector	SVB		98	⊡	⊡	⊡	⊡	⊡	⊡	⊡	⊡	⊡
Angle	MW		98	⊡	⊡	⊡	⊡	⊡	⊡	⊡	⊡	⊡
Retaining bracket	HK		98	⊡	⊡	⊡	⊡	⊡	⊡	⊡	⊡	⊡
Hammerhead screw	HKS		98	⊡	⊡	⊡	⊡	⊡	⊡	⊡	⊡	⊡
Sliding nut	SBM		98	⊡	⊡	⊡	⊡	⊡	⊡	⊡	⊡	⊡

■ geeignet □ bedingt geeignet ⊡ geeignet in Kombination

General Fixings

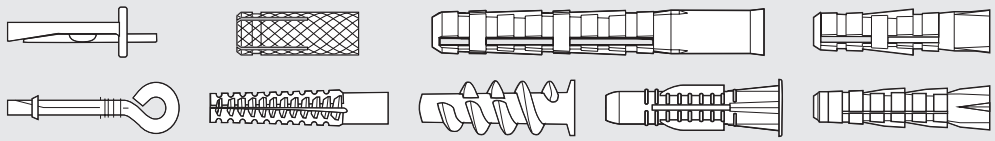

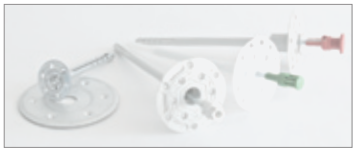

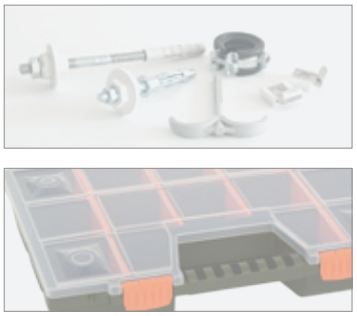

Expansion Plug SUPER - SD S

NYLON WARRANTY

Push-through plug SUPER DSD S

Push-through plug SUPER with collar KSD S

Chipboard screw, zinc plated, blue chromated

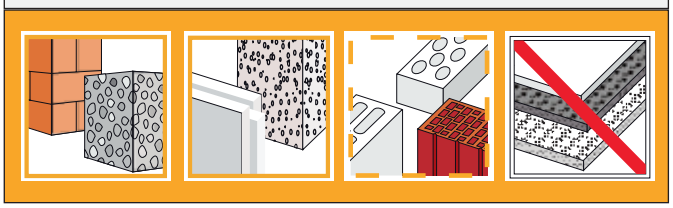

Advice

The maximum load can only be achieved if:

- the largest possible screw diameter is used
- the minimum screw length* is observed
- the drill hole is cleaned (use brush and airpump)
- the drill hole dimensions correspond to those stated by the manufacturer.

It is recommended to drill 1 mm smaller in case of aircrete and to drill without percussion in case of perforated bricks or hollow blocks.

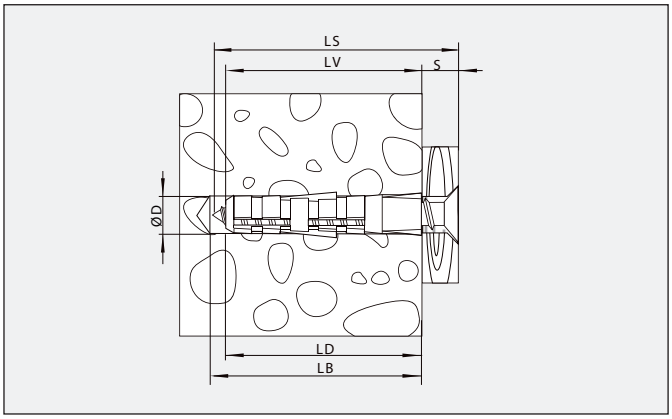

*** min. screw length**

	plug length	LD
+	render, tiles etc.	
+	fixture thickness	S
+	1x screw diameter	ØS
=	min. screw length	LS

Suitability

Base materials:
All types of concrete and solid bricks, limited suitability for hollow base materials

For fixing of:
All objects which can be fixed with wood screws or chipboard screws: picture frames, lamps, cup-boards, skirting boards, towel rails, soap dishes, letter boxes, alarm units, flower baskets, curtain rails

Characteristics

- Proven triple-split design ensures perfect screw guidance
- Faster setting and high load bearing capacity
- Retaining wedges prevent rotation in the drillhole
- Ideal expansion in both dense and soft base materials as well as in hollow blocks
- Open plug tip allows long screws to escape

Pullout loads in kN*

	Beton C20/25	Ziegel Mz15	Porenbeton P4
SD S 5 mm	1,2	1,1	0,4
SD S 6 mm	3,2	3,4	0,9
SD S 7 mm	4,1	3,9	1,0
SD S 8 mm	5,2	4,5	1,3
SD S 10 mm	8,4	7,1	2,0
SD S 12 mm	11,7	-	2,8
SD S 14 mm	20,0	-	4,1

* the loads stated are failure loads valid forgeneral fixings and confirmed strength of the base material indicated. Lower loads apply in case of render, insulating material, nonload bearing areas of the base material or too small edge/joint distances. An adequate safety factor should be applied.

.

Installation

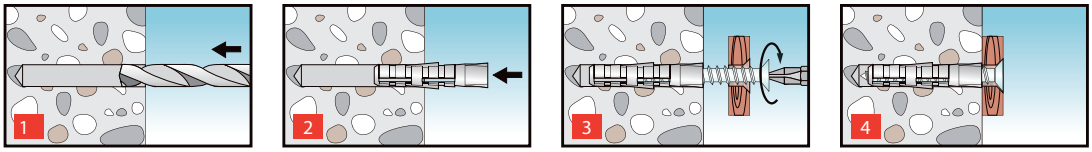

Expansion Plug SUPER - SD S

Technische Daten

DSD S - Push-through plug SUPER

type	ref.-no.	ØD Ø Plug Ø Bit [mm]	LD = LV plug length = min. ancho-rage depth, [mm]	LB drill depth [mm]	ØS Ø screw dia [mm]	qty. per box pcs.	outer carton pcs.
DSD S 5	**32746**	5	25	35	2,5 - 4,0	100	5400
DSD S 6	**32747**	6	30	40	3,5 - 5,0	100	5400
DSD 7	**32748**	7	35	45	4,0 - 5,5	100	3600
DSD S 8	**32749**	8	40	50	4,5 - 6,0	100	2700
DSD S 10	**32750**	10	50	65	6,0 - 8,0	50	1350
DSD S 12	**32751**	12	60	75	8,0 - 10,0	25	675
DSD S 14	**32752**	14	70	85	10,0 - 12,0	20	540
DSD S 5	**32725**	5	25	35	2,5 - 4,0	200	10800
DSD S 6	**32726**	6	30	40	3,5 - 5,0	200	7200
DSD 7	**32727**	7	35	45	4,0 - 5,5	200	5400
DSD S 8	**32728**	8	40	50	4,5 - 6,0	200	3200
DSD S 10	**32729**	10	50	65	6,0 - 8,0	100	1600
DSD S 12	**32730**	12	60	75	8,0 - 10,0	75	1200
DSD S 14	**32731**	14	70	85	10,0 - 12,0	50	800

KEW DSD S SP - Push-through plug SUPER with chipboard screws

DSD S 6 SP	**36151**	6	30	40	4,5 - 50,0	50	2700
DSD S 8 SP	**36152**	8	40	50	6,0 - 70,0	50	1350
DSD S 10 SP	**36153**	10	50	65	7,0 - 80,0	25	900

DSD S - Push-through plug SUPER with or without chipboard screws, packed in green stack

DSD S 6	**33000**	6	30	40	3,5 - 4,5	400	16000
DSD S 8	**33001**	8	40	50	4,5 - 6,0	200	8000
DSD S 10	**33002**	10	50	65	6,0 - 8,0	100	4000
DSD S 6 SP	**33013**	6	30	40	4,0 - 40,0	175	2625
DSD S 8 SP	**33014**	8	40	50	5,0 - 50,0	75	1125
DSD S 5 Box	**37108**	5	25	35	2,5 - 4,0	600	24000

KSD S 5 Box	**37409**	5	25	35	2,5 - 4,0	600	24000
KSD S 6 Box	**37037**	6	30	40	3,5 - 5,0	350	14000

Technische Daten

KSD S - Push-through plug SUPER with collar

type	ref.-no.	ØD Ø Plug Ø Bit [mm]	LD = LV plug length = min. ancho-rage depth, [mm]	LB drill depth [mm]	ØS Ø screw dia [mm]	qty. per box pcs.	outer carton pcs.
KSD S 5	**32753**	5	25	35	2,5 - 4,0	100	5400
KSD S 6	**32754**	6	30	40	3,5 - 5,0	100	5400
KSD 7	**32755**	7	35	45	4,0 - 5,5	100	2700
KSD S 8	**32756**	8	40	50	4,5 - 6,0	50	900
KSD S 10	**32757**	10	50	65	6,0 - 8,0	25	900
KSD S 12	**34356**	12	60	75	8,0 - 10,0	25	675
KSD S 14	**34357**	14	70	85	10,0 - 12,0	20	540
KSD S 5	**32741**	5	25	35	2,5 - 4,0	200	10800
KSD S 6	**32742**	6	30	40	3,5 - 5,0	200	5400
KSD 7	**32743**	7	35	45	4,0 - 5,5	200	3200
KSD S 8	**32744**	8	40	50	4,5 - 6,0	200	3200
KSD S 10	**32745**	10	50	65	6,0 - 8,0	100	1600
KSD S 12	**34358**	12	60	75	8,0 - 10,0	50	800
KSD S 14	**34359**	14	70	85	10,0 - 12,0	40	640

NEW

DSD S HWK L - Push-through plug SUPER in craftsman suitcase small (loose)

type	ref.-no.	ØD	LD = LV	LB	ØS	qty.per box pcs.	outer carton pcs.
DSD S 6 HWKL	**35670**	6	30	40	3,5 - 5,0	2500	
DSD S 8 HWKL	**35671**	8	40	50	4,5 - 6,0	1500	
DSD S 10 HWKL	**35672**	10	50	65	6,0 - 8,0	800	

NEW

DSD S HWK V- Push-through plug SUPER in the craftsman suitcase large (packaged)

DSD S 6 HWK	**35833**	6	30	40	3,5 - 5,0	100	8000
DSD S 8 HWK	**35834**	8	40	50	4,5 - 6,0	100	4000
DSD S 10 HWK	**35835**	10	50	65	6,0 - 8,0	50	2000
DSD S 12 HWK	**35836**	12	60	75	8,0 - 10,0	25	1000
DSD S 14 HWK	**35837**	14	70	85	10,0 - 12,0	20	800
KSD S 6 HWK	**35838**	6	30	40	3,5 - 5,0	100	8000
KSD S 8 HWK	**35839**	8	40	50	4,5 - 6,0	50	3000
KSD S 10 HWK	**35840**	10	50	65	6,0 - 8,0	25	2000
KSD S 12 HWK	**35841**	12	60	75	8,0 - 10,0	25	1000
KSD S 14 HWK	**35842**	14	70	85	10,0 - 12,0	20	800

Universal Plug SUPER - SU

NYLON WARRANTY

push-through Universal plug SU D

Universal plug with collar SU K

Chipboard screw, zinc plated, blue chromated

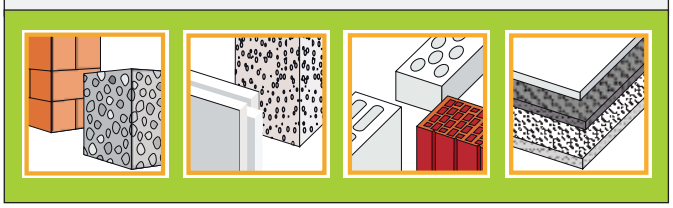

Advice

The maximum load can only be achieved if:

- the largest possible screw diameter is used
- the minimum screw length* is observed
- the drill hole is cleaned (use brush and airpump)
- the drill hole dimensions correspond to those stated by the manufacturer.

If installed in hollow bricks or boards/ panels hooks and eye screws with integral washer must be used to make sure that the plug form locks in the substrate (knotting down). In case of plasterboard pre-drill with a metal or wood drill bit to avoid damaging the panel.

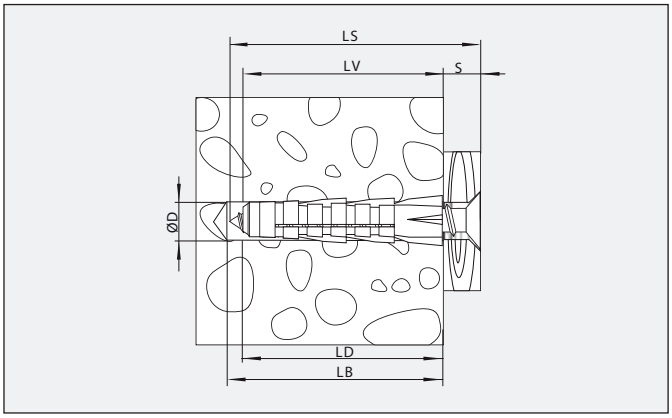

Suitability

Base materials:
All types of concrete, masonry, hollow blocks and bricks, boards and panels

For fixing of:
All objects which can be fixed with wood screws or chipboard screws:
picture frames, lamps, cup-boards, skirting boards, towel rails, soap dishes, letter boxes, alarm units, flower baskets, curtain rails

*** min. screw length**

	plug length	LD
+	render, tiles etc..	
+	fixture thickness	S
+	1x screw diameter	ØS
=	min. screw length	LS

Characteristics

- universal use in nearly all materials
- besondere Eignung für Gipskarton
- proven triple-split design for perfect centrical screw guidance
- plug knots down in hollow material
- collar prevents the plug to slip into hole
- expansion free plug shank prevents damaging render or tiles

Pullout loads in kN*

	Beton C20/25	Hochlochziegel Hlz 12	Porenbeton P4	Gipskarton 12,5mm	Gipskarton 2x12,5mm
SU 5	2,1	1,0	1,0	0,5	0,8
SU 6	3,1	1,0	1,1	0,5	1,1
SU 6 L	6,2	1,3	1,3	0,7	1,3
SU 8	6,1	1,4	1,6	0,7	1,7
SU 10	6,9	1,5	2,8	0,8	1,8
SU 12	10,0	2,0	4,3	0,8	1,8
SU 14	12,5	2,7	5,0	-	-

* the loads stated are failure loads valid for general fixings and confirmed strength of the base material indicated. Lower loads apply in case of render, insulating material, non load bearing areas of the base material or too small edge/joint distances. An adequate safety factor should be applied.

Installation

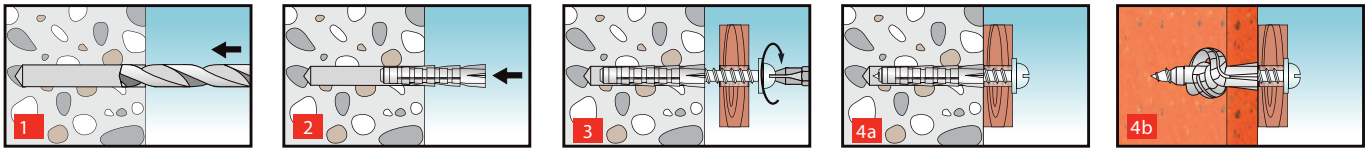

Universal Plug SUPER - SU

Technical Data

SU D - push-through Universal plug Super

type	ref.-no.	ØD Ø Plug Ø Bit [mm]	LD = LV plug length = min. ancho-rage depth, [mm]	LB drill depth [mm]	ØS Ø screw dia [mm]	qty. per box pcs.	outer carton pcs.
SU D 5	**36701**	5	30	40	3,0 - 4,0	100	5400
SU D 6	**35795**	6	35	45	4,0 - 5,0	100	3600
SU D 6 L	**35845**	6	50	60	4,0 - 5,0	100	2700
SU D 8	**35796**	8	50	60	5,0 - 6,0	50	1350
SU D 10	**35797**	10	60	75	7,0 - 8,0	25	900
SU D 12	**36702**	12	71	85	8,0 - 10,0	25	675
SU D 14	**36703**	14	75	90	10,0 - 12,0	20	540

SU D SP - Push-through Universal plug SUPER with chipboard screws

SU D 6 SP	**36148**	6	35	45	5,0 x 50,0	50	1800
SU D 8 SP	**36149**	8	50	60	6,0 x 70,0	25	900
SU D 10 SP	**36150**	10	60	75	7,0 x 80,0	10	360

SU D - push-through Universal plug Super with or without chipboard screws, packed in green stack box

SU D 6L Box	**35981**	6	50	60	4,0 - 5,0	200	8000
SU D 10 Box	**35983**	10	60	75	7,0 - 8,0	80	3200

SU K - Universal plug SUPER with collar with or without chipboard screws, packed in green stack box

SU K 5 Box	**37759**	5	31	40	3,0 - 4,0	250	10000
SU K 6 Box	**37760**	6	36	45	4,0 - 5,0	200	8000
SU K 6L Box	**37761**	6	51	60	4,0 - 5,0	150	6000
SU K 8 Box	**37762**	8	51	60	5,0 - 6,0	100	4000
SU K 10 Box	**37763**	10	61	75	7,0 - 8,0	60	2400
SU K 12 Box	**37764**	12	72	85	8,0 - 10,0	30	1200

Technical Data

SU K - Universal plug SUPER with collar

type	ref.-no.	ØD Ø Plug Ø Bit [mm]	LD = LV plug length = min. ancho-rage depth, [mm]	LB drill depth [mm]	ØS Ø screw dia [mm]	qty. per box pcs.	outer carton pcs.
SU K 5	**36704**	5	31	40	3,0 - 4,0	100	5400
SU K 6	**35798**	6	36	45	4,0 - 5,0	100	3600
SU K 6 L	**35846**	6	51	60	4,0 - 5,0	100	2700
SU K 8	**35799**	8	51	60	5,0 - 6,0	50	1350
SU K 10	**35800**	10	61	75	7,0 - 8,0	25	900
SU K 12	**36705**	12	72	85	8,0 - 10,0	25	675
SU K 14	**36706**	14	76	90	10,0 - 12,0	20	540

NEW

SU D HWK V - push-through Universal plug Super in the craftsman suitcase large (packaged)

type	ref.-no.	ØD	LD = LV	LB	ØS	qty. per box/pcs	outer carton/pcs
SU D 6 HWK	**37600**	6	35	45	4,0 - 5,0	100	4000
SU D 8 HWK	**37601**	8	50	60	5,0 - 6,0	50	2000
SU D 10 HWK	**37602**	10	60	75	7,0 - 8,0	25	1450
SU D 12 HWK	**37603**	12	71	85	8,0 - 10,0	25	1000
SU K 6 HWK	**37604**	6	36	45	4,0 - 5,0	100	5800
SU K 6 L HWK	**37605**	6	51	60	4,0 - 5,0	50	4000
SU K 8 HWK	**37606**	8	51	60	5,0 - 6,0	50	2000
SU K 10 HWK	**37607**	10	61	75	7,0 - 8,0	25	1450

BOX SU K - Universal plug SUPER with collar in high quality steel box including one bit set PROFI

type	ref.-no.	qty. per box pack	qty. per pack pcs	contents
BOX SU K 6	**36632**	48	3600	SU K 6 + PROFI-Bit-Set
BOX SU K 6 L	**36633**	32	1600	SU K 6L + PROFI-Bit-Set
BOX SU K 8	**36634**	32	1280	SU K 8 + PROFI-Bit-Set
BOX SU K 10	**36635**	32	800	SU K 10 + PROFI-Bit-Set
		8	400	SU K 6L
BOX SU K 6/8/10	**36636**	16	640	SU K 8 + PROFI-Bit-Set
		8	200	SU K 10

Universal Plug SUPER - SU

SU K Assortment kit

BOX SU K - Assortment box small

type	ref.-no..	qty.per box pcs.	outer carton pcs.	contents
SUK-BOX 160 pcs	**37744**	1	13	50 plugSU K 6, 50 chipboard screws 4,5 x 50, 30 plug SU K 8, 30 chipboard screws 6 x 70
SUK/DSD S-Box 155 pcs	**38034**	1	13	35 plug SU K 6, 20 plug SU K 8, 10 plug SU K 10, 50 plug DSD S 6, 30 plug DSD S 8, 10 plug DSD S 10
SUK/DSD S-Box 164 pcs	**38035**	1	13	20 plug U K 6, 12 plug SU K 8, 4 plug SU K 10, 25 plug DSD S 6, 15 plug DSD S 8, 6 plug DSD S 10, 45 chipboard screws 4,5 x 50, 27 chipboard screws 6,0 x 70, 10 chipboard screws 7,0 x 80
SUK/DSD S-Box 148 pcs	**38040**	1	13	25 plug SU K 6, 10 plug SU K 8, 25 plug DSD S 6, 13 plug DSD S 8, 39 chipboard screws 4,5 x 50, 21 chipboard screws 6 x 70, 4round hook 3,5 x 70, 2 round hook white 4,2 x 65, 2 eye screw white 5,0 x 85, 5 angle hook 4,4 x 40, 1 masonry drill Ø 6, 1 masonry drill Ø 8

BOX SU K - Assortment box medium

type	ref.-no.	qty.per box pcs.	outer carton pcs.	contents
SUK/DSD S-Box 300 pcs	**38042**	1	12	60 plug SU K 6, 30 plug SU K 6L, 20 plug SU K 8, 130 plug DSD S 6, 60 plug DSD S 8
SUK/DSD S-Box 340 pcs	**38043**	1	12	20 plug SU K 5, 30 plug SU K 6, 12 plug SU K 8, 8 plug SU K 10, 30 plug DSD S 5, 40 plug DSD S 6, 20 plug DSD S 8, 10 plug DSD S 10, 50 chipboard screws3,5 x 45, 70 chipboard screws 4,0 x 40, 32 chipboard screws 5,0 x 50, 8 chipboard screws 6,0 x 70
SUK/DSD S-Box 194 pcs	**38047**	1	12	40 plug SU K 6, 15 plug SU K 8, 5 plug SU K 10, 70 plug DSD S 6, 30 plug DSD S 8, 6 plug DSD S 10, 8 round hook 3,5 x 70, 4 round hook 5,0 x 85, 2 eye screw 5,0 x 85, 6 angle hook 4,4 x 40, 2 round hook white 4,2 x 65, 2 round hook white 5,4 x 80, 2 Scaffold Screw 8,0 x 80, 1 masonry drill Ø6, 1 masonry drill Ø 8

BOX SU K - Assortment box large

type	ref.-no..	qty.per box pcs.	outer carton pcs.	contents
SUK-BOX 608 pcs	**37741**	1	8	75 plug SU K 5, 350 plug SU K 6, 30 plug SU K 6L, 100 plug SU K 8, 35 plug SU K 10, 18 plug SU K 12
SUK/DSD S-Box 772 pcs	**38048**	1	8	150 plug SU K 6, 70 plug SU k 8, 20 plug SU K 10, 200 plug DSD S 6, 120 plug DSD S 8, 30 plug DSD S 10, 100 chipboard screws 4,5 x 50, 50 chipboard screws 6,0 x 70, 30 chipboard screws 7,0 x 80, 1 masonry drill Ø 6, 1 masonry drill Ø 8

Universal Plug - UD

Push-through Universal plug UDD

Universal plug with collar UKD

Advice

The maximum load can only be achieved if:

- the largest possible screw diameter is used
- the minimum screw length* is observed
- the drill hole is cleaned (use brush and airpump)
- the drill hole dimensions correspond to those stated by the manufacturer.

It is recommended to drill 1 mm smaller in aircrete and to drill with rotation only in case of hollow or perforated bricks.
If installed in hollow bricks or boards/ panels hooks and eye screws with integral washer must be used to make sure that the plug form locks in the substrate (knotting down).
In plasterboard panels use metal or wood drill bits.

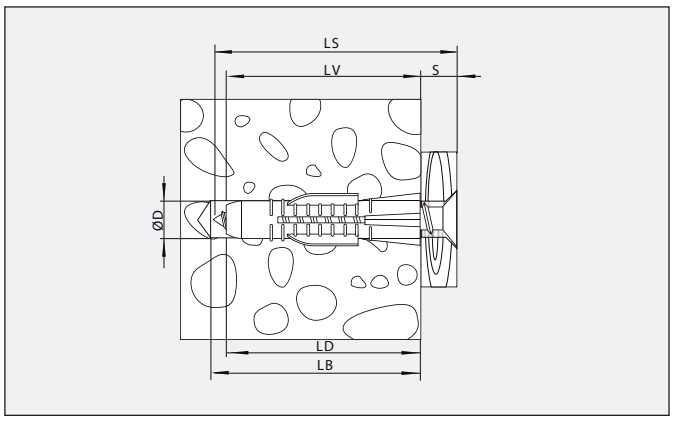

	plug length	LD
+	render, tiles etc..	
+	fixture thickness	S
+	1x screw diameter	ØS
=	min. screw length	LS

Suitability

Base materials:
All types of concrete, masonry, hollow blocks and bricks, boards and panels

For fixing of:
All objects which can be fixed with wood screws or chip-board screws: picture frames, lamps, cup-boards skirting boards, towel rails, soap dishes, letter boxes, alarm units, flower baskets, curtain rails

Characteristics

- universal use in nearly all materials
- proven triple-split design for perfect centrical screw guidance
- plug knots down in hollow material
- collar prevents the plug to slip into hole
- expansion free plug shank prevents damaging render or tiles

Pullout loads in kN*

	concrete C20/25	hollow bricks HLz 12	gypsum plasterboard 12,5 mm	aircrete P4
UD 5 mm	0,70	0,70	0,60	0,60
UD 6 mm	1,50	0,85	0,70	0,90
UD 8 mm	3,40	1,20	1,00	1,60
UD 10 mm	3,75	1,30	1,00	2,10
UD 12 mm	4,70	1,35	1,10	2,10

* the loads stated are failure loads valid for general fixings and confirmed strength of the base material indicated. Lower loads apply in case of render, insulating material, non load bearing areas of the base material or too small edge/joint distances. An adequate safety factor should be applied.

Installation

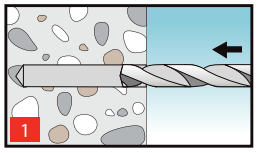

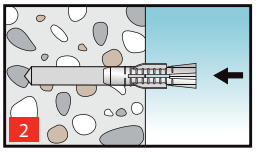

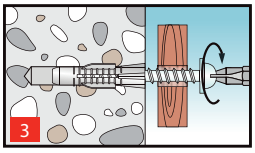

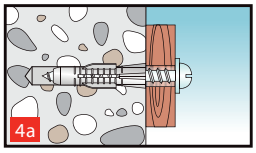

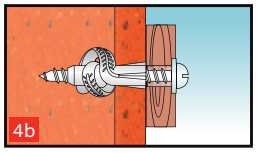

Universal Plug - UD

Technical Data

UDD - Push-through Universal plug

type	ref.-no.	ØD Ø Plug Ø Bit [mm]	LD = LV plug length = min. ancho-rage depth, [mm]	LB drill depth [mm]	ØS Ø screw dia [mm]	qty. per box pcs.	outer carton pcs.
UDD 5 x 31	**32700**	5	31	40	3,0 - 4,0	100	5400
UDD 6 x 36	**32701**	6	36	45	4,0 - 5,0	100	3600
UDD 6 x 51	**35791**	6	51	60	4,0 - 4,5	100	2700
UDD 8 x 51	**32704**	8	51	60	5,0 - 6,0	50	1350
UDD 10 x 61	**32705**	10	61	75	7,0 - 8,0	25	900
UDD 12 x 71	**32706**	12	71	85	8,0 - 10,0	25	900
UDD 14 x 75	**32707**	14	75	90	10,0 - 12,0	20	540

Technical Data

UKD - Universal plug with collar

type	ref.-no.	ØD Ø Plug Ø Bit [mm]	LD = LV plug length = min. ancho-rage depth, [mm]	LB drill depth [mm]	ØS Ø screw dia [mm]	qty. per box pcs.	outer carton pcs.
UKD 5 x 32	**32708**	5	32	40	3,0 - 4,0	100	5400
UKD 6 x 37	**32709**	6	37	45	4,0 - 5,0	100	3600
UKD 6 x 52	**35792**	6	52	60	4,0 - 4,5	100	2700
UKD 8 x 52	**32712**	8	52	60	5,0 - 6,0	50	1350
UKD 10 x 62	**32713**	10	62	75	7,0 - 8,0	25	900
UKD 12 x 72	**32714**	12	72	85	8,0 - 10,0	25	675
UKD 14 x 76	**32715**	14	76	90	10,0 - 12,0	20	540

stack box and Assortment box

UD - Universal plug packed in green
stack box with or without chipboard screws.

UDD 6 x 36 Box	**36002**	6	36	45	4,0 - 5,0	200	8000
UDD 6 x 51 Box	**36045**	6	51	60	4,0 - 5,0	150	6000
UDD 8 x 51 Box	**36003**	8	51	60	5,0 - 6,0	100	4000
UDD 10 x 61 Box	**36004**	10	61	75	6,0 - 8,0	50	2000
UKD 6 x 37	**33007**	6	37	45	4,0 x 5,0	200	8000
UKD 6 x 52 Box	**36046**	6	52	60	4,0 - 5,0	150	6000
UKD 8 x 52	**33008**	8	52	60	5,0 x 6,0	100	4000
UKD 6 x 37 SP	**33015**	6	37	45	4,5 x 50,0	75	3000
UKD 8 x 52 SP	**33016**	8	52	60	6,0 x 70,0	35	1400
UKD 10 x 62 Box	**33009**	10	62	75	7,0 - 8,0	50	2000

BOX UDD - Assortment box large

type	ref.-no.	contents	qty.per box pcs.	outer carton pcs.
UDD-BOX 800 pcs.	**37740**	90 plug UDD 5x31, 450 plug UDD 6x36, 35 plug UDD 6x51, 150 plug UDD 8x51, 50 plug UDD 10x61, 15 plug UDD 12x71, 10 plug UDD 14x75	1	8

BOX UDD - Assortment box medium

type	ref.-no.	contents	qty.per box pcs.	outer carton pcs.
UDD/ DSD S-BOX 275 tlg	**38041**	55 plug UDD 6x36, 40 plug UDD 6x51, 25 plug UDD 8x51, 15 plug UDD 10x61, 80 plug DSD S 6, 40 plug DSD S 8, 20 plug DSD S 10	1	12

NEW

UDD HWK V - Universal plug
in the craftsman suitcase large (packaged)

type	ref.-no.	ØD	LD = LV	LB	ØS	qty.per box pcs.	outer carton pcs.
UDD 6x36 HWK	**35851**	6	36	45	4,0 - 5,0	100	5.800
UDD 8x51 HWK	**35852**	8	51	60	5,0 - 6,0	50	2.000
UDD 10x61 HWK	**35853**	10	61	75	7,0 - 8,0	25	1.450
UDD 12x71 HWK	**35854**	12	71	85	8,0 - 10,0	25	1.450
UKD 6x37 HWK	**36579**	6	37	45	4,0 - 5,0	100	5.800
UKD 6x52 HWK	**36580**	6	52	60	4,0 - 5,0	100	4.000
UKD 8x52 HWK	**37513**	8	52	60	5,0 - 6,0	50	2.000
UKD 10x62 HWK	**37514**	10	62	75	7,0 - 8,0	25	1.450
UKD 12X72 HWK	**37517**	12	72	85	8,0 - 10,0	25	1.000

BOX UDD - Assortment box small

type	ref.-no.	contents	qty.per box pcs.	outer carton pcs.
UDD-BOX 190 pcs.	**37743**	60 plug UDD 6x36, 60 chipboard screws 4,5x50, 35 plug UDD 8x51, 35 chipboard screws 6 x 70	1	13
UDD-BOX 192 pcs.	**37742**	105 plug UDD 6x36, 20 plug UDD 6x51, 65 plug UDD 8x51, 1 masonry drill Ø 6, 1 masonry drill Ø 8	1	13

NYLON WARRANTY

Extended Expansion Plug - LSD

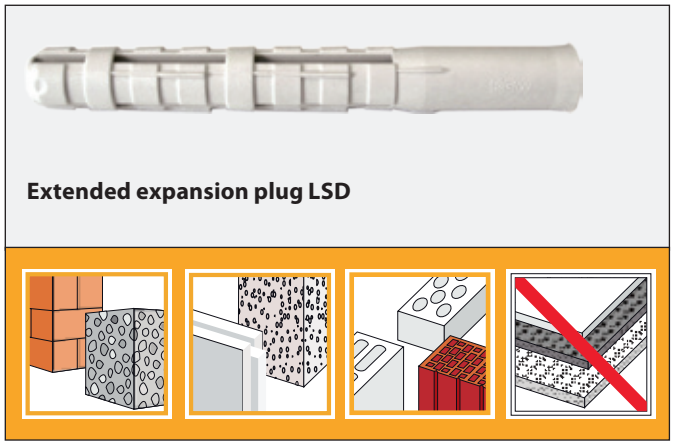

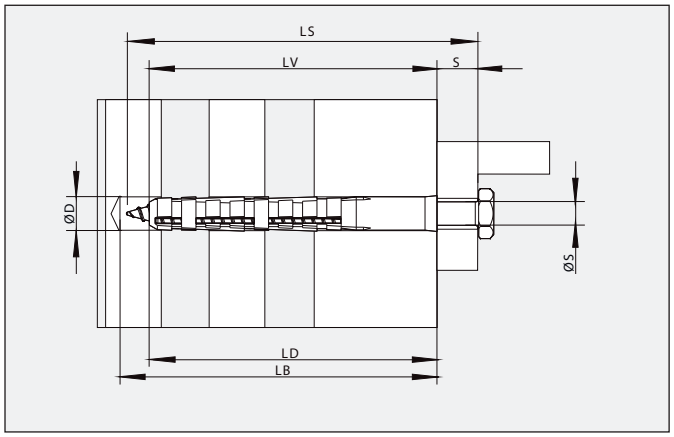

Suitability

Base materials:
low density materials such as hollow blocks, bricks, sand lime stones, aircrete, light concrete as well as concrete and solid bricks

For fixing of:
balustrades, hand rails, gates, door frames, fireproof doors, windows, cup-boards, battens, linings, awnings, metal and wooden supporting constructions for facades or roofs

Characteristics

- extended expansion area to ensure an excellent grip also in soft base materials
- proven triple-split design for perfect centrical guidance of wood or metric screws
- solid collar prevents the plug to slip into the hole and ensures exact screw-in depth
- low tightening resistance ensures faster installation, high load bearing capacity

Advice

The maximum load can only be achieved if:

- the correct screw diameter is used
- the minimum screw length* is observed
- the drill hole is cleaned (use brush and airpump)
- the drill hole dimensions correspond to those stated by the manufacturer.

* min. screw length

	plug length	LD
+	render, tiles etc.	
+	fixture thickness	S
+	1x screw diameter	ØS
=	min. screw length	LS

Technical Data

LSD - Extended expansion plug

type	ref.-no.	ØD Ø plug Ø bit [mm]	LD = LV plug length = min. ancho-rage depth [mm]	LB min. drill depth [mm]	ØS srew dia. [mm]	qty. per box pcs.	outer carton pcs.
LSD 14 x 120	**35521**	14	120	135	10/M 10	50	400
LSD 14 x 120	**35522**	14	120	135	10/M 10	1000	-

Pullout loads in kN*

	hollow sand lime stone KSL
LSD 14 x 120	10,5

* the loads stated are failure loads valid for general fixings and confirmed strength of the base material indicated. An adequate safety factor should be applied.

Installation

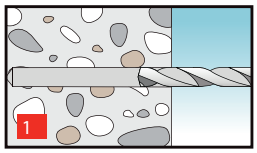

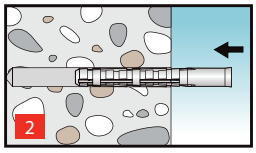

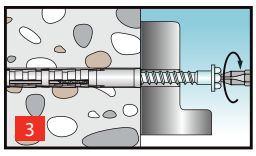

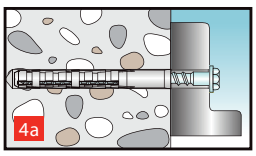

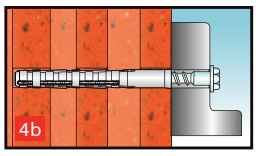

Expansion Socket - SP

NYLON WARRANTY

Expansion socket SP

Chipboard screw, zinc plated, blue chromated

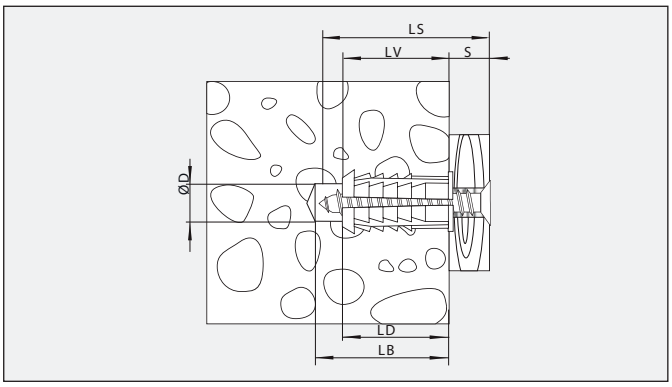

*** min. screw length**

	plug length	LD
+	fixture thickness	S
=	min. screw length	LS

Suitability

Base materials:
All types of concrete and masonry, thin panels, boards, metal sheeting, limited suitability for soft materials

For fixing of:
All objects which can be fixed with wood screws or chipboard screws: lamps, handles, wooden or metal supporting constructions, angles, fittings.

Characteristics

- specially suited for boards and panels
- ideal expansion to achieve high load bearing capacity
- collar prevents the socket to slip into the hole

Advice

The maximum load can only be achieved if:

- the largest screw diameter is used
- the minimum screw length* is observed
- dhe drill hole is cleaned (use brush and airpump)
- the drill hole dimensions correspond to those stated by the manufacturer.

Technical Data

SP - Expansion socket

type	ref.-no.	ØD Ø plug Ø bit [mm]	LD plug length [mm]	LB min. drill depth [mm]	ØS srew dia. [mm]	qty. per box pcs.	outer carton pcs.
SP 5	**36927**	5	10	20	2,5 - 4,0	200	10800
SP 6	**36186**	6	12	20	3,5 - 4,5	200	10800
SP 7	**36187**	7	15	25	4,0 - 5,5	100	5400
SP 8	**36188**	8	18	30	4,5 - 6,0	100	5400

SP S - Expansion socket with chipboard screw

SP 6 S	**36154**	6	12	20	3,0 x 30,0	100	5400
SP 7 S	**36155**	7	15	20	4,0 x 40,0	50	2700
SP 8 S	**36156**	8	18	25	5,0 x 50,0	50	2700

Pullout loads in kN*

	Concrete C20/25	sheet metal (thickn. = 0,5 xLD)
SP 5	0,15	0,15
SP 6	0,20	0,20
SP 7	0,25	0,25
SP 8	0,30	0,30

* the loads stated are failure loads valid for general fixings and confirmed strength of the base material indicated. An adequate safety factor should be applied.

Installation

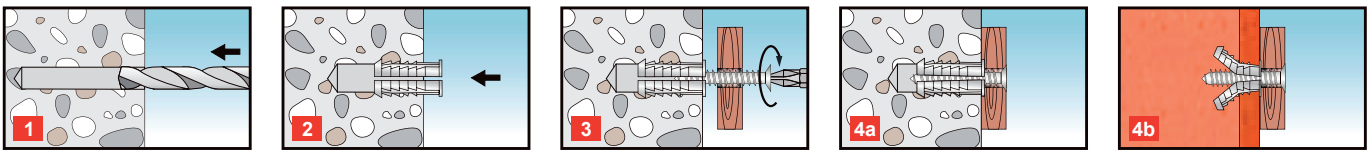

Aircrete Plug - GBD

Aircrete plug GBD

Setting tool - SW

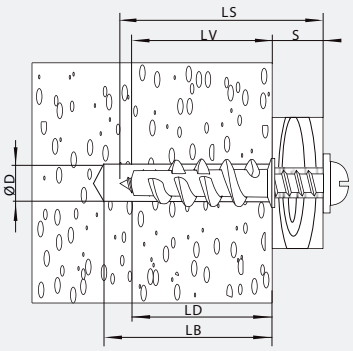

*** min. screw length**

	plug length	LD
+	fixture thickness	S
=	min. screw length	LS

Suitability

Base materials:
Aircrete (aerated cement)

For fixing of:
All objects which can be fixed with wood, chipboard, tap or metric screws (M4): picture frames lamps, handles, shelves, cup-boards, towel rails, letter boxes, flower baskets, curtain rails, cable and pipe clamps, supporting constructions

Characteristics

- time saving fixing system
- self undercutting into aircrete ensures an expansion-free anchorage
- non-conductive plastic material to fix electrical appliances
- stable edge prevents slipping into the bore and guarantees exact screw-in depth
- reuseable setting tool

Advice

The maximum load can only be achieved if:

- the largest screw diameter is used
- the minimum screw length* is observed
- the drill hole is cleaned (use brush and airpump)
- the drill hole dimensions correspond to those stated by the manufacturer

Technical Data

GBD - Aircrete plug

type	ref.-no.	ØD Ø plug Ø bit [mm]	LD = LV plug length = min. anchorage depth [mm]	LB min. drill depth [mm]	ØS srew dia. [mm]	qty. per box pcs.	outer carton pcs.
GBD 10 x 50	**36581**	10	50	60	4,0 - 6,0 / M4	50	800

SW -Setting tool

SW	**32183**					10	50

GBD SW -Aircrete plug with setting tool

GBD 10 x 50 SW	**36582**	10	50	60	4,0 - 6,0 / M4	50+1	800+16

Pullout loads in kN*

	aircrete P2	aircrete P4
GBD 10 x 50	1,0	1,4

* the loads stated are failure loads valid for general fixings and confirmed strength of the base material indicated. The loads do not apply for anchorings subject to national approvals. An appropriate safety factor should be applied.

Installation

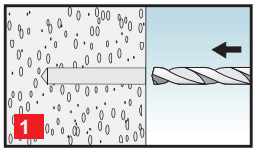

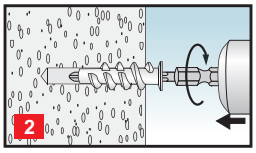

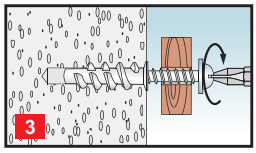

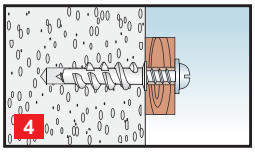

Aircrete Plug - G7

NYLON WARRANTY

Aircrete Plug
G7

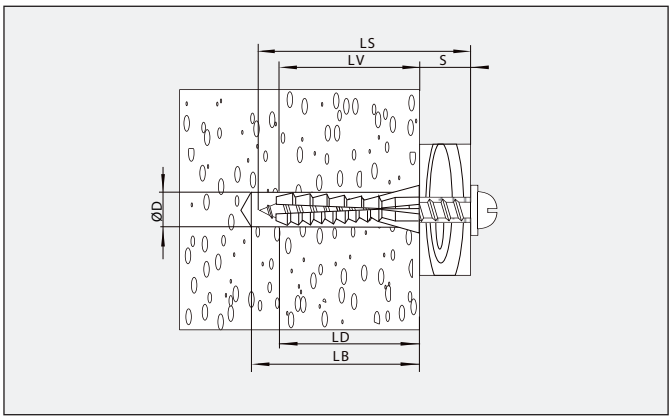

*** min. screw length**

	plug length	LD
+	fixture thickness	S
=	min. screw length	LS

Suitability

Base materials:
Aircrete (aerated cement)

For fixing of:
All objects which can be fixed with wood screws or chipboard screws: picture frames, lamps, hand rails, wall mounted shelves, towel rails, letter boxes, flower baskets, curtain rails, cable clamps, pipe clamps, wooden and metal supporting constructions

Characteristics

- the special design allows for more expansion ensuring an extra strong anchorage
- effective anti-rotation system through two differently shaped expansion parts and square shaped shank

Advice

The maximum load can only be achieved if:

- the largest screw diameter is used
- the minimum screw length* is observed
- the drill hole is cleaned (use brush and airpump)
- the drill hole dimensions correspond to those stated by the manufacturer

Technical Data

KEW - Aircrete plug

type	ref.-no.	ØD Ø plug Ø bit [mm]	LD = LV plug length = min. ancho-rage depth [mm]	LB min. drill depth [mm]	ØS srew dia. [mm]	qty. per box pcs.	outer carton pcs.
G7	**32185**	7	50	60	5	60	960

Pullout loads in kN*

	aircrete P2	aircrete P4
G7	1,7	2,3

* the loads stated are failure loads valid for general fixings and confirmed strength of the base material indicated. The loads do not apply for anchorings subject to national approvals. An adequate safety factor should be applied.

Installation

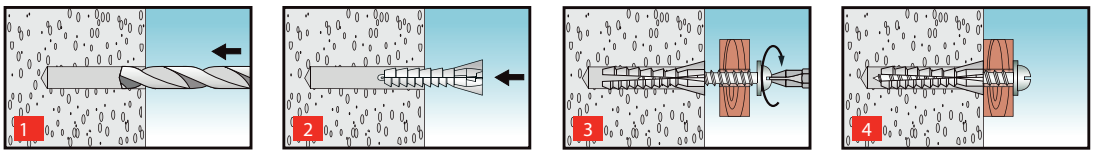

Brass Plug - MSD

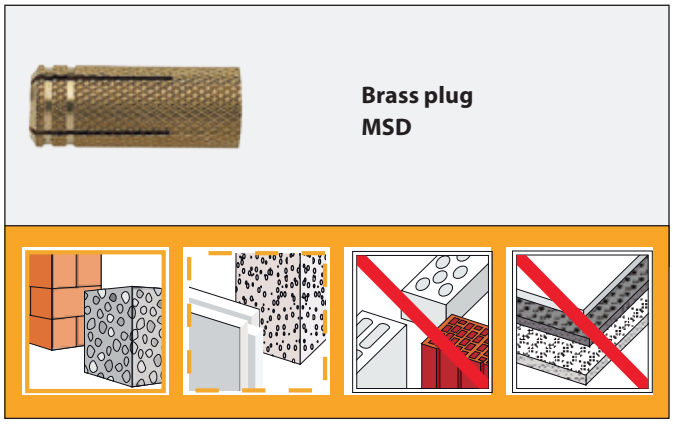

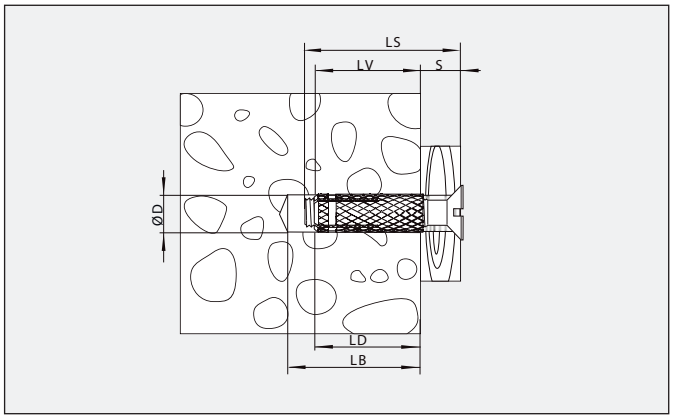

*** min. screw length**

	plug length	LD
+	fixture thickness	S
=	min. screw length	LS

Suitability

Base materials:
Concrete and solid masonry, limited suitability for solid soft materials

For fixing of:
All objects which can be fixed with metric screws: small wall mounted shelves, light cup boards, curtain rails, wardrobes, wooden and metal supporting constructions

Characteristics

- corrosion resistant expansion plug to be used with metric screws in solid base materials.

Advice

The maximum load can only be achieved if:

- the minimum screw length* is observed
- the drill hole is cleaned (use brush and airpump)
- the drill hole dimensions correspond to those stated by the manufacturer

Technical Data

MSD - Brass plug

type	ref.-no.	Ø plug Ø bit [mm]	ØD LD = LV plug length = min. ancho-rage depth [mm]	LB min. drill depth [mm]	ØS srew dia. [mm]	qty. per box pcs.	outer carton pcs.
MSD M 5	**36723**	6	20	35	M 5	100	5400
MSD M 6	**34931**	8	25	40	M 6	100	5400
MSD M 8	**34932**	10	30	45	M 8	100	1600
MSD M 10	**34933**	12	35	50	M 10	100	1600
MSD M 12	**36724**	14	40	55	M 12	50	800

Pullout loads in kN*

	concrete C 20/25
MSD M 5	3,9
MSD M 6	4,9
MSD M 8	8,8
MSD M10	17,3
MSD M12	21,5

* the loads stated are failure loads valid for general fixings and confirmed strength of the base material indicated. The loads do not apply for anchorings subject to national approvals. An adequate safety factor should be applied.

Installation

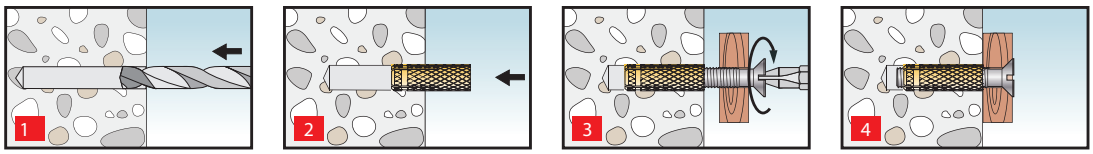

Metal Universal Plug - MUD

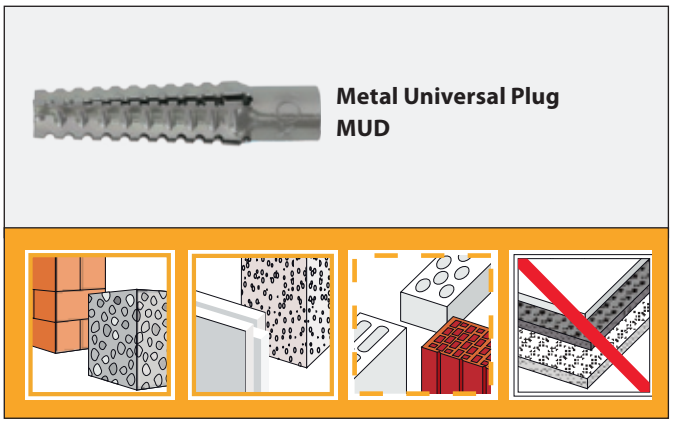

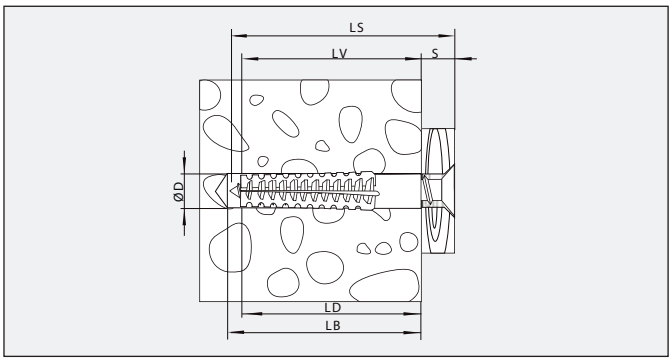

*** min. screw length**

	plug length	LD
+	fixture thickness	S
=	min. screw length	LS

Suitability

Base materials:
Concrete, solid masonry, aircrete, limited suitability for hollow base materials

For fixing of:
All objects which can be fixed with wood screws and chipboard screws: sanitary appliances, cable clamps, pipe clamps, ducts

Characteristics

- perfect screw guidance through ribbed inner design
- fire resistant fixing as per German technical guidelines for gas pipe installations (TRGI 3.3.7.2.)
- anchorage in aircrete G2 and G4: plug may be hammered in without prior pre-drilling

Advice

The maximum load can only be achieved if:

- the maximum screw diameter is used
- the minimum screw length* is observed
- the drill hole is cleaned (use brush and airpump)
- the drill hole dimensions correspond to those stated by the manufacturer bohren.

Technical Data

MSD - Metall universal plug

type	ref.-no.	ØD Ø plug Ø bit [mm]	LD = LV plug length = min. anchorage depth [mm]	LB min. drill depth [mm]	ØS srew dia. [mm]	qty. per box pcs.	outer carton pcs.
MUD 5x30	**32187**	5,0 - 7,0	30	40	4,0 - 5,0	200	5400
MUD 6x32	**32188**	7,0 - 9,0	32	40	5,0 - 6,0	200	3200
MUD 8x38	**32189**	10,0 - 12,0	38	50	6,0 - 8,0	100	1600
MUD 8x60	**32190**	10,0 - 12,0	60	70	6,0 - 8,0	100	1600
MUD 10x60	**32191**	12,0 - 14,0	60	75	8,0 - 10,0	100	800

* the drill diameter depends on the base material: the harder the base material/ the higher the compressive strength, the larger the drill diameter required.

Pullout loads in kN*

	Ø Bit	aircrete P2	aircrete P4
MUD 5 x 30	3,0	0,5	1,4
MUD 6 x 32	4,0	0,8	1,9
MUD 8 x 38	6,0	2,0	3,9
MUD 8 x 60	6,0	2,6	4,4
MUD 10 x 60	8,0	5,1	6,3

* the loads stated are failure loads valid for general fixings and confirmed strength of the base material indicated. Lower loads apply in case of render, insulating material, non load bearing areas of the base material or too small edge/joint distances. An adequate safety factor should be applied.

Installation

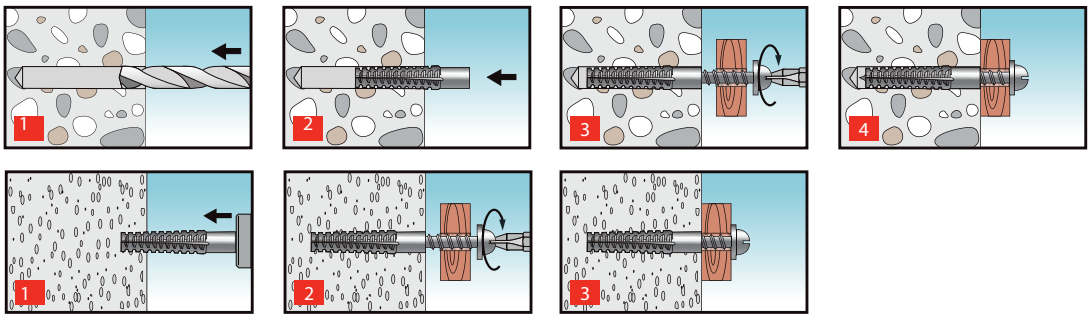

Ceiling Nail - DN

Ceiling Nail
DN
steel, zinc plated

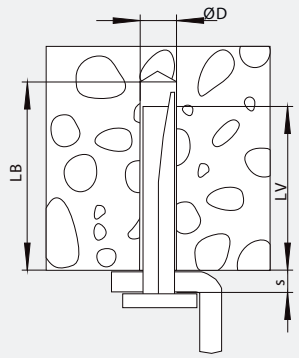

Suitability

Base materials:
Concrete

For fixing of:
timber battens, borders, metal profiles, wire suspensions, chains, ropes, punched tapes, ventilation channels, wooden or metal supporting constructions, ceiling covers

Characteristics

- fast-to-install ceiling anchor with high load bearing capacity
- reduced drilling effort needed combined with fast hammer-set installation
- official fire rating
- European Technical Approval(ETA-06/0259) for multiple use for non-structural applications in concrete

Advice

The ceiling nail is officially approved for loads up to 0,5 kN and may only be installed as push-through fixing for suspended ceilings as per DIN 4121 and DIN 18168 within the frame of acoustic constructions. It may only be used as stipulated in the approval.

Technical Data

DN - Ceiling nail

Type	ref.-no.	ØD Ø plug Ø bit [mm]	LB min. drill depth [mm]	LV min. anchorage depth [mm]	S max. fixt. thickn. [mm]	qty. per box pcs.	outer carton pcs.
DN 35	**32167**	6	40	32	5	100	1600
DN 65	**32168**	6	40	32	35,0	100	1600

Characteristic values according to design method C*

Ceiling Nail - DN			DN 35	DN 65
Any load direction				
Characteristic resistance (in concrete C20/25 to C50/60)	F_{Rk}	[kN]	5	5
Partial safety factor[1)]	γ_M	[-]	1,5	1,5
Spacing	S_{cr}	[mm]	200	200
Edge distance	C_{cr}	[mm]	150	150
Sher load with lever arm				
Characteristic bending moment[2)]	$M^0_{Rk,s}$	[Nm]	5,4	5,4
Partial safety factor	γ_{Ms}	[-]	1,25	1,25

1) Installation safety factor g = 1,0 included 2
2) Characteristic bending moment according to ETAG 001, Annex C, 5.2.3.2 b
* The anchor is to be used only for multiple use for non-structural applications, the definition of multiple use according to the Member States is given in the informative Annex 1 of ETAG 001, Part 6.
The fitness of the anchor for the intended use is given under the following conditions: The anchorages are designed in accordance with the »Guideline for European technical approval of Metal Anchors for Use in Concrete«, Anex C, Method C under the responsibility of an engineer experienced in anchorages and concrete work.

Installation

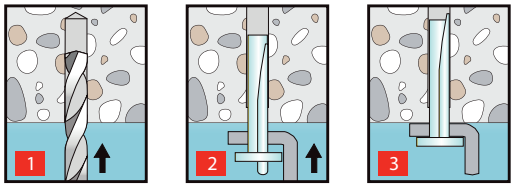

Resin Plug - KND

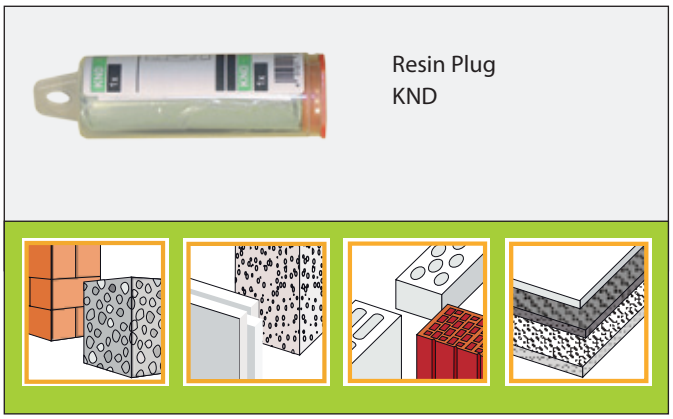

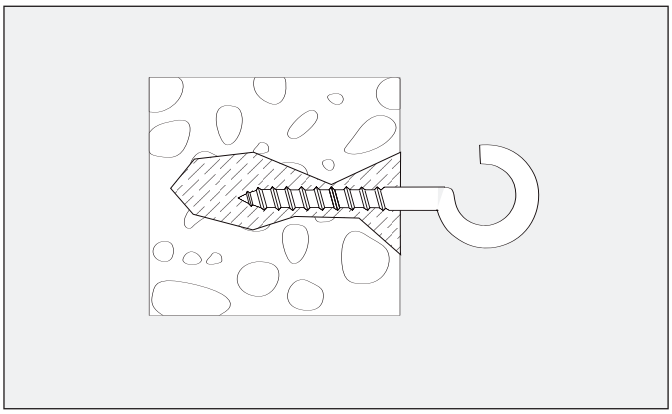

Suitability

Base materials:
concrete and masonry, hollow bricks, hollow blocks, boards and panels

For fixing of:
screws, bolts, hooks which can be easily screwed into the resin

Characteristics

- Highly efficient 2-component resin for fixing, sealing, filling, smoothing
- fills up aborted drill holes
- Perfect alternative to plugs: screws, hooks, etc. can be screwed into and removed easily from the resin.
- the KND forms a solid, durable, non shrinking and chemically resistant mass.

Advice

warning notice:
contains epoxy compounds. irritates eyes and skin. Ssensitising possible when skin contact. Immediately wash skin with water and soap when contact. Wear proper protective gloves. Keep out of children´s reach.

Technical Data

KND - Resin plug

type	ref.-no.	content	sales unit	outer carton pcs.
KND 80	**36459**	resin, 80 g 1 glove 1 instruction paper	1	6

Curing times for KND

time	temperature	final strength
5 Min.	150°C	100 %
30 Min.	25°C	25 %
60 Min.	25°C	50 %
12 Std.	25°C	100 %

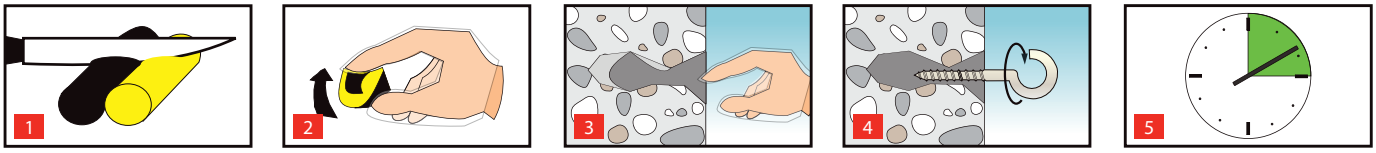

Frame Fixings

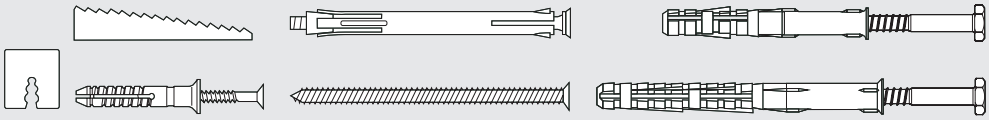

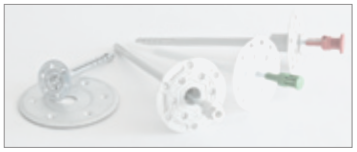

Nail Plug - ND

NYLON WARRANTY

Nail plug,
countersunk collar
ND S

Nail plug,
cylindrical collar
ND Z

Nail plug,
large cylindrical collar
ND ZG

Nail plug
with connecting thread
ND M
Nail plug, mushroom

shaped collar
ND P

pre-assembled with zinc plated nailscrew

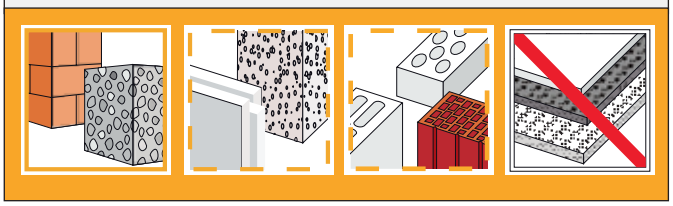

Characteristics

- time saving fixing system consisting of plug and nailscrew
- plug is pre-assembled: nailscrew is already pre-installed in plug
- Nailscrew is hammered in, no screw driver needed
- setting locks inside the plug prevent premature expansion during installation
- plug and fixture can easily be removed by turning out the screw

Advice

Nail plugs may only be installed as through-fixings; the fixture may not be positioned between screw head and plug collar.
If installed in hollow base material the plug should be long enough to at least allow for expansion in the second brick chamber.

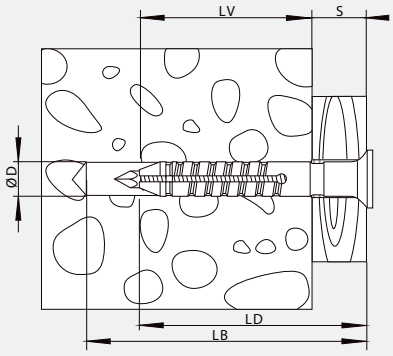

Suitability

Base materials:
concrete, solid materials, limited suitability for aircrete, hollow blocks, perforated bricks

For fixing of:
Render/connection profiles, skirting boards, metal sheets, battens, cable and pipe clamps, claddings, wooden and metal supporting constructions

Pullout loads in kN*

	concrete C20/25	solid bricks Mz 12	aircrete P2
ND 5 mm	0,9	0,8	0,2
ND 6 mm	1,3	1,1	0,3
ND 8 mm	1,8	1,7	0,4

* the loads stated are failure loads valid for general fixings and confirmed strength of the base material indicated. Lower loads apply in case of render, insulating material, non load bearing areas of the base material or too small edge/joint distances. An adequate safety factor should be applied.

Installation

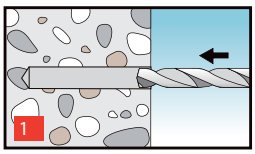

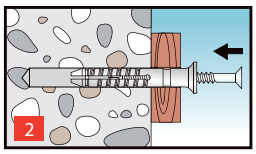

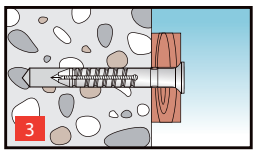

Nail Plug - ND

Technical Data

ND S - Nail plug with countersunk collar and pre-assembled nail-screw, zinc plated

type	ref.-no.	ØD Ø plug Ø bit [mm]	LD plug length [mm]	LB min. drill depth [m	LV min. an-chorage depth [mm]	S max. fixt. thickn. [mm]	qty. per box pcs.	outer carton pcs.
ND 5 x 30/ 5 S	**32682**	5	30	40	25	5	100	3600
ND 5 x 36/ 11 S	**32683**	5	36	46	25	11	100	2700
ND 5 x 40/ 15 S	**32684**	5	40	50	25	15	100	2700
ND 5 x 50/ 25 S	**32685**	5	50	60	25	25	100	2700
ND 6 x 35/ 5 S	**32686**	6	35	45	30	5	50	1800
ND 6 x 40/ 10 S	**32687**	6	40	50	30	10	50	1800
ND 6 x 50/ 20 S	**32688**	6	50	60	30	20	50	1800
ND 6 x 60/ 30 S	**32689**	6	60	70	30	30	50	1800
ND 6 x 75/ 45 S	**32690**	6	75	85	30	45	50	1350
ND 6 x 80/ 50 S	**32691**	6	80	90	30	50	50	1350
ND 8 x 40/ 5 S	**36707**	8	40	50	35	5	50	800
ND 8 x 60/ 20 S	**32692**	8	60	70	40	20	50	800
ND 8 x 80/ 40 S	**32693**	8	80	90	40	40	50	800
ND 8 x 100/ 60 S	**32694**	8	100	110	40	60	50	800
ND 8 x 120/ 80 S	**32695**	8	120	130	40	80	50	400
ND 8 x 140/100 S	**32696**	8	140	150	40	100	50	400
ND 8 x 160/120 S	**32697**	8	160	170	40	120	50	300

ND S A2 - Nail plug with countersunk collar and pre-assembled nailscrew of stainless steel A4/ 316

ND 6 x 40/10 S A2	**36710**	6	40	50	30	10	50	1800
ND 6 x 60/30 S A2	**36711**	6	60	70	30	30	50	1800
ND 8 x 60/20 S A2	**36712**	8	60	70	40	20	50	800
ND 8 x 80/40 S A2	**36713**	8	80	90	40	40	50	800

ND M - Nail plug with cylindrical collar and pre-assembled nail-screw, zinc plated, with metric connecting thread

ND 6 x 40 M6	**32016**	6	40	50	30		100	1600
ND 8 x 60 M8	**32017**	8	60	70	40		100	800

Technical Data

ND Z - Nail plug with cylindrical collar and pre-assembled nail-screw, zinc plated

type	ref.-no.	ØD Ø plug Ø bit [mm]	LD plug length [mm]	LB min. drill depth [m	LV min. an-chorage depth [mm]	S max. fixt. thickn. [mm]	qty. per box pcs.	outer carton pcs.
ND 5 x 30/ 3 Z	**33171**	5	30	40	25	3	100	3600
ND 5 x 36/ 9 Z	**33172**	5	36	46	25	9	100	2700
ND 5 x 40/ 13 Z	**33173**	5	40	50	25	13	100	2700
ND 5 x 50/ 23 Z	**33174**	5	50	60	25	23	100	1600
ND 6 x 35/ 3 Z	**33175**	6	35	45	30	3	50	1800
ND 6 x 40/ 8 Z	**33176**	6	40	45	30	8	50	1800
ND 6 x 50/ 18 Z	**33177**	6	50	60	30	18	50	1800
ND 6 x 60/ 28 Z	**33178**	6	60	70	30	28	50	1800
ND 6 x 75/ 43 Z	**33179**	6	75	85	30	43	50	1350
ND 6 x 80/ 48 Z	**33180**	6	80	90	30	48	50	1350
ND 8 x 40/ 3 Z	**36708**	8	40	50	35	3	50	800
ND 8 x 60/ 18 Z	**33181**	8	60	70	40	18	50	800
ND 8 x 80/ 38 Z	**33182**	8	80	90	40	38	50	800
ND 8 x 100/ 58 Z	**33183**	8	100	110	40	58	50	800
ND 8 x 120/ 78 Z	**33184**	8	120	130	40	78	50	800
ND 8 x 140/ 98 Z	**33185**	8	140	150	40	98	50	800
ND 8 x 160/118 Z	**33186**	8	160	170	40	118	50	300

ND ZG - Nail plug with large cylindrical collar and pre-assembled nailscrew with large head, zinc plated, specially suited to fix skirting boards

ND 6 x 35/ 3 ZG	**36714**	6	35	45	30	3	50	1800
ND 6 x 50/18 ZG	**36715**	6	50	60	30	18	50	1800
ND 6 x 60/28 ZG	**36716**	6	60	70	30	28	50	1800
ND 8 x 80/38 ZG	**36717**	8	80	90	40	38	50	800
ND 8 x 100/58 ZG	**36718**	8	100	110	40	58	50	800

ND P - Nail plug with mushroom shaped collar and pre-assembled nailscrew, zinc plated

ND 6 x 35/ 3 P	**32012**	6	35	45	30	3	100	1600
ND 6 x 40/ 8 P	**32013**	6	40	45	30	8	100	1600
ND 6 x 50/18 P	**32014**	6	50	60	30	18	100	1600
ND 6 x 60/28 P	**32015**	6	60	70	30	28	100	1600
ND 8 x 40/ 3 P	**36709**	8	40	50	35	3	50	800

Nail Plug - ND

NYLON WARRANTY

Assortment box and

BOX ND S - Assortment box medium

type	ref.-no.	qty.per box pcs.	outer carton pcs.	contents
Nailplug-Box 120 pcs	**38046**	1	12	50 plug ND 6x35/5 S, 25 plug ND 6x40/10 S, 16 plug ND 6x80/50 S, 16plug ND 8x60/20 S, 8 plug ND 8x80/40 S, 8 plug ND 8x100/60 S

ND S HWK L - Nail plug with countersunk collar and preassembled nailscrew, zinc plated in craftsman suitcase small (packaged)

type	type	ØD Ø plug Ø bit [mm]	LD plug length [mm]	LB min drill depth [mm]	LV min anchorage depth [mm]	S max fixt. thickn. [mm]	qty. per box pcs.	outer carton pcs.
ND 6x40/10 S HWKL	**35673**	6	40	50	30	10	1.000	
ND 6x 60/ 30 S HWKL	**35674**	6	60	70	30	30	700	
ND 6x 80/ 50 S HWKL	**37847**	6	80	90	30	50	500	
ND 8x 60/ 20 S HWKL	**37511**	8	60	70	40	20	400	
ND 8x 80/ 40 S HWKL	**35675**	8	80	90	40	40	300	
ND 8x100/ 60 S HWKL	**35676**	8	100	110	40	60	250	
ND 8x120/ 80 S HWKL	**37512**	8	120	130	40	80	250	

Frame Plug - RD

Frame plug with torx screw
RD TX

Frame plug with hexagonal screw
RD SK

Frame plug with hexagonal screw and integral washer
RD SKS
with pre-assembled anchor screw, zinc plated and blue chromated

Suitability

Use category a/b
Base materials:
concrete, natural stone, solid sand lime brick, solid brick, limited suitability for solid soft base materials

For fixing of:
gates, doors, fireproof doors, windows, wall mounted cupboards, wardrobes, battens, claddings, wooden or metal supporting constructions for facade and roof constructions.

Characteristics

- fixing system consisting of an extended nylon plug together with a special screw
- At choice: special screw with countersunk head and torx drive T40, with hexagon head or with hexagon head and integral washer to anchor metal parts.
- pre-assembled anchor unit for much safer and faster installation. Plug to be inserted into hole until plug collar is flush with fixture
- European technical approval (ETA) and approved by building authorities as multiple use for cladding

Advice

The frame plug should only be used as through-fixing. The fixture may not be positioned between screw head and plug collar. The maximum load bearing capacity can only be achieved if:

- the drill hole is cleaned (use brush and airpump)
- the drill hole dimensions correpond to those stated by the manufacturer

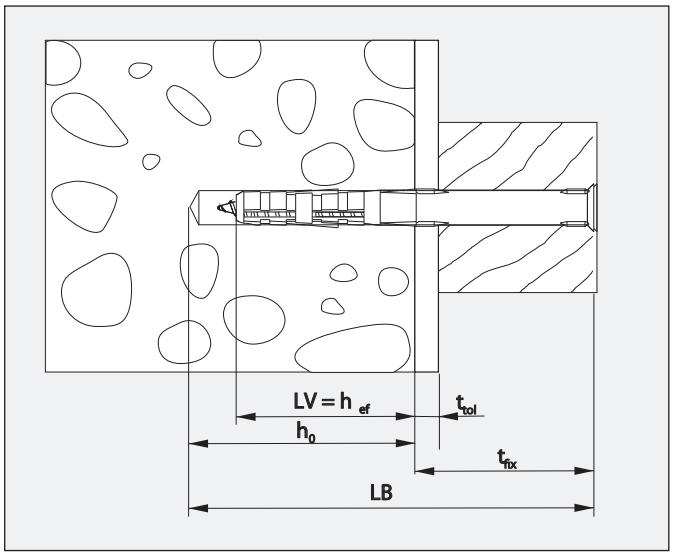

Safe workings loads

allowable loads and component dimensions see page 39/40.

Installation

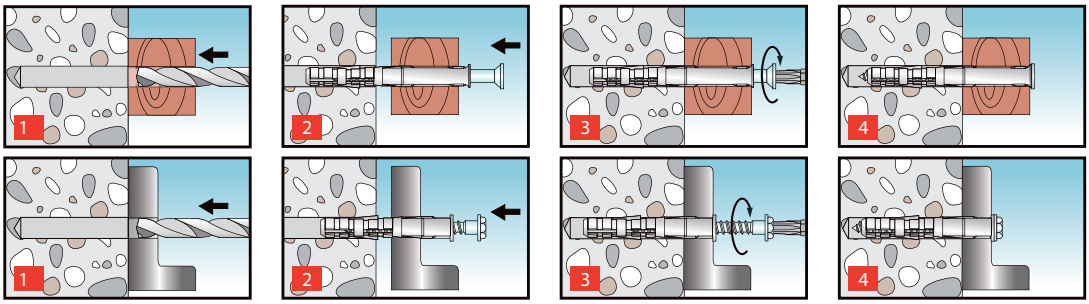

Frame Plug - RD

Technical Data

RD TX - with special torx screw, zinc plated

ETA-08/0191 - ETAG 020 a - b

type	ref.-no.	ØD Ø plug Ø bit [mm]	LD plug length [mm]	LB min. drill depth [m	LV min. an-chorage depth [mm]	S max. fixt. thickn. [mm]	bit/ SW	qty. per box pcs.
RD 8 x 60/ 20 TX[1]	**36240**	8	60	70	40	20	T30	50
RD 8 x 80/ 40 TX[1]	**36241**	8	80	90	40	40	T30	50
RD 8 x 100/ 60 TX[1]	**36242**	8	100	110	40	60	T30	50
RD 8 x 120/ 80 TX[1]	**36243**	8	120	130	40	80	T30	50
RD 8 x 140/100 TX[1]	**36244**	8	140	150	40	100	T30	50
RD 10 x 60/ 10 TX	**36245**	10	60	70	50	10	T40	50
RD 10 x 80/ 30 TX	**36246**	10	80	90	50	30	T40	50
RD 10 x 100/ 50 TX	**36247**	10	100	110	50	50	T40	50
RD 10 x 120/ 70 TX	**36248**	10	120	130	50	70	T40	50
RD 10 x 140/ 90 TX	**36249**	10	140	150	50	90	T40	50
RD 10 x 160/110 TX	**36250**	10	160	170	50	110	T40	50
RD 10 x 180/130 TX	**36251**	10	180	190	50	130	T40	50
RD 10 x 200/150 TX	**36252**	10	200	210	50	150	T40	50
RD 10 x 230/180 TX	**36253**	10	230	240	50	180	T40	50
RD 10 x 260/210 TX	**36254**	10	260	270	50	210	T40	50

ETA-08/0191 - ETAG 020 a - b

RD SKS - with cylindrical collar and special hexagonal screw with integral washer, zinc plated, to anchor metal profiles

RD 10 x 60/ 10 SKS	**36256**	10	60	70	50	10	SW13/T40	50
RD 10 x 80/ 30 SKS	**36257**	10	80	90	50	30	SW13/T40	50
RD 10 x 100/ 50 SKS	**36258**	10	100	110	50	50	SW13/T40	50
RD 10 x 120/ 70 SKS	**36259**	10	120	130	50	70	SW13/T40	50
RD 10 x 140/ 90 SKS	**36260**	10	140	150	50	90	SW13/T40	50
RD 10 x 160/110 SKS	**36261**	10	160	170	50	110	SW13/T40	50
RD 10 x 180/130 SKS	**36262**	10	180	190	50	130	SW13/T40	50

ETA-08/0191 - ETAG 020 a - b

RD SK - with special hexagonal screw, zinc plated

RD 8 x 80/ 40 SK[1]	**36225**	8	80	90	40	40	SW10	50
RD 8 x 100/ 60 SK[1]	**36226**	8	100	110	40	60	SW10	50
RD 8 x 120/ 80 SK[1]	**36227**	8	120	130	40	80	SW10	50
RD 8 x 140/100 SK[1]	**36228**	8	140	150	40	100	SW10	50
RD 10 x 200/150 SK	**36236**	10	200	210	50	150	SW13	50
RD 10 x 230/180 SK	**36237**	10	230	240	50	180	SW13	50
RD 10 x 260/210 SK	**36238**	10	260	270	50	210	SW13	50

RD PZ - with special pozidrive screw, zinc plated

RD 6 x 60/30 PZ[1]	**36221**	6	60	70	30	30	PZ3	50
RD 8 x 60/20 PZ[1]	**36222**	8	60	70	40	20	PZ4	50
RD 8 x 80/40 PZ[1]	**36223**	8	80	90	40	40	PZ4	50

Technical Data

RD TX A4 - with special torx screw made of stainless Steel A4/316

ETA-08/0191 - ETAG 020 a - b

type	ref.-no.	ØD Ø plug Ø bit [mm]	LD plug length [mm]	LB min. drill depth [m	LV min. an-chorage depth [mm]	S max. fixt. thickn. [mm]	bit/ SW	qty. per box pcs.
RD 10 x 60/ 10 TX A4	**36558**	10	60	70	50	10	T40	50
RD 10 x 80/ 30 TX A4	**36559**	10	80	90	50	30	T40	50
RD 10 x 100/ 50 TX A4	**36560**	10	100	110	50	50	T40	50
RD 10 x 120/ 70 TX A4	**36561**	10	120	130	50	70	T40	50
RD 10 x 140/ 90 TX A4	**36562**	10	140	150	50	90	T40	50
RD 10 x 160/110 TX A4	**36563**	10	160	170	50	110	T40	50
RD 10 x 180/130 TX A4	**36564**	10	180	190	50	130	T40	50
RD 10 x 200/150 TX A4	**36565**	10	200	210	50	150	T40	50
RD 10 x 230/180 TX A4	**36566**	10	230	240	50	180	T40	50
RD 10 x 260/210 TX A4	**36567**	10	260	270	50	210	T40	50

ETA-08/0191 - ETAG 020 a - b

RD SKS A4 - with cylindrical collar and special hexagonal screw with integral washer, stainless steel A4/ 316, to anchor metal profiles

RD 10 x 60/ 10 SKS A4	**36568**	10	60	70	50	10	SW13/T40	50
RD 10 x 80/ 30 SKS A4	**36569**	10	80	90	50	30	SW13/T40	50
RD 10 x 100/ 50 SKS A4	**36570**	10	100	110	50	50	SW13/T40	50
RD 10 x 120/ 70 SKS A4	**36571**	10	120	130	50	70	SW13/T40	50
RD 10 x 140/ 90 SKS A4	**36572**	10	140	150	50	90	SW13/T40	50
RD 10 x 160/110 SKS A4	**36573**	10	160	170	50	110	SW13/T40	50
RD 10 x 180/130 SKS A4	**36574**	10	180	190	50	130	SW13/T40	50

ETA-08/0191 - ETAG 020 a - b

RD SK A4 - with special hexagonal screw made of stainless steel A4/316

RD 10 x 200/150 SK A4	**36550**	10	200	210	50	150	SW13	50
RD 10 x 230/180 SK A4	**36551**	10	230	240	50	180	SW13	50
RD 10 x 260/210 SK A4	**36552**	10	260	270	50	210	SW13	50

ADK - cover caps for KEW frame plug

Bezeichnung	Art. Nr. weiß	Art. Nr. braun	Ø [mm]	Verwendung für	Menge St./VE	Menge St./UK
ADK RD 8 PZ	**34819**	34820	13,5	RDD 8 PZ	100	1000
ADK RD 10	**34817**	34818	16,0	RDD 10 TX	100	1000

Note:
- not pre-assembled from length 230
- more combinations upon request

[1] not part of approval

Frame Plug, extended expansion area - RDD

Frame plug with Torx screw
RDD TX

Frame plug with hexagonal screw
RDD SK

Frame plug with hexagonal screw and integral washer
RDD SKS
with pre-assembled anchor screw, zinc plated and blue chromated

Suitability

Base materials:
all types of masonry, soft solid materials such as air-crete or light concrete, sand lime perforated brick, vertical and horizontal perforated brick.

For fixing of:
gates, doors, fireproof doors, windows, wall mounted cup-boards, wardrobes, battens, claddings, wooden or metal sup-porting constructions for facade and roof constructions.

Characteristics

- fixing system consisting of a nylon plug with extended expansion area and a special screw
- The extended expansion area ensures a safe anchorage even in soft base material as well as in hollow blocks or bricks
- at choice: special screw with countersunk head and torx drive T40, with hexagon head or with hexagon head and integral washer to anchor metal parts
- pre-assembled anchor unit for much safer and faster installation. Plug to be inserted into hole until plug collar is flush with fixture
- approval pending as multiple anchorage of cladding systems

Advice

The frame plug should only be used as through-fixing. The fix-ture may not be positioned between screw head and plug collar. The maximum load bearing capacity can only be achieved if:

- the drill hole is cleaned (use brush and airpump)
- the drill hole dimensions correspond to those stated by the manufacturer

It is recommended to bore in drilling mode for perforated building materials.

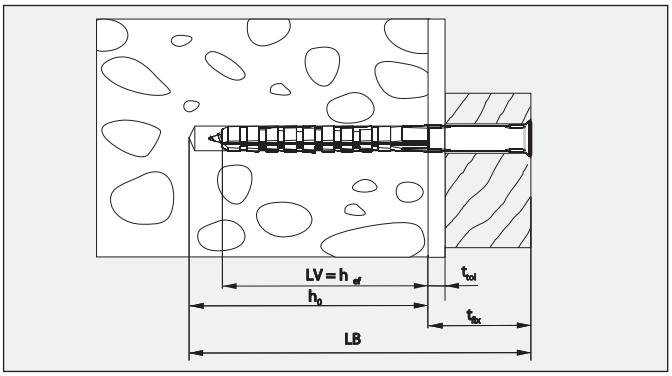

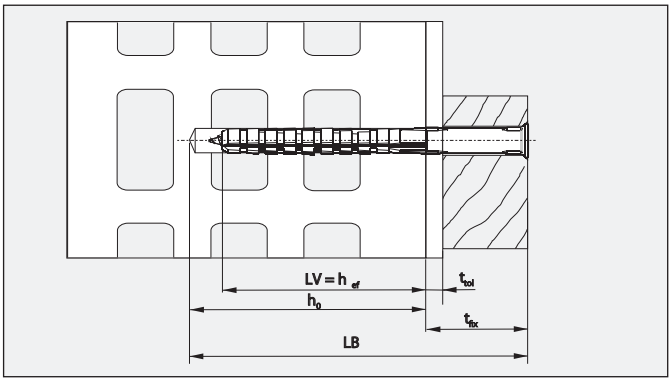

Installation

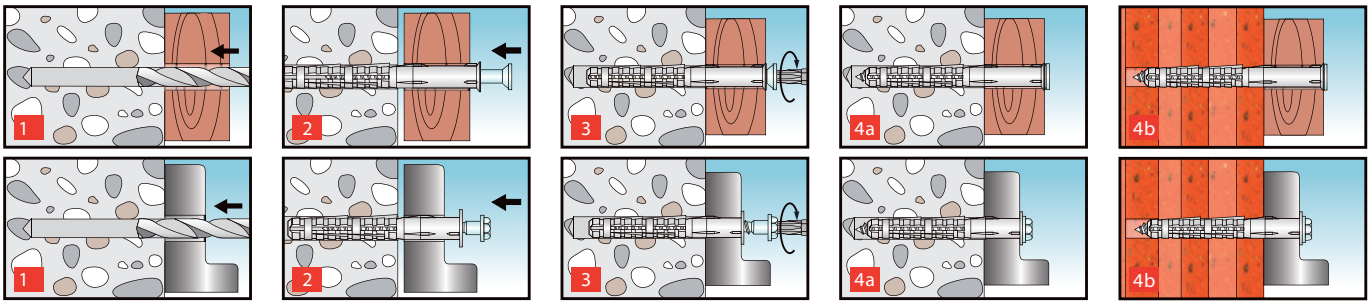

Frame Plug, extended expansion area - RDD

Technical Data

ETA-08/0191 - ETAG 020
a - b - c

RDD TX - with special torx screw, zinc plated

type	ref.-no.	ØD Ø plug Ø bit [mm]	LD plug length [mm]	LB min. drill depth [m	LV min. anchorage depth [mm]	S max. fixt. thickn. [mm]	bit/ SW	qty. per box pcs.
RDD 8 x 100/ 20 TX[1]	**36289**	8	100	110	80	20	T30	50
RDD 8 x 120/ 40 TX[1]	**36290**	8	120	130	80	40	T30	50
RDD 8 x 140/ 60 TX[1]	**36291**	8	140	150	80	60	T30	50
RDD 10 x 80/ 10 TX[1]	**36292**	10	80	90	70	10	T40	50
RDD 10 x 100/ 20 TX	**36293**	10	100	110	80	20	T40	50
RDD 10 x 120/ 40 TX	**36294**	10	120	130	80	40	T40	50
RDD 10 x 140/ 60 TX	**36295**	10	140	150	80	60	T40	50
RDD 10 x 160/ 80 TX	**36296**	10	160	170	80	80	T40	50
RDD 10 x 180/100 TX	**36297**	10	180	190	80	100	T40	50
RDD 10 x 200/120 TX	**36298**	10	200	210	80	120	T40	50
RDD 10 x 230/150 TX	**36299**	10	230	240	80	150	T40	50
RDD 10 x 260/180 TX	**36300**	10	260	270	80	180	T40	50

ETA-08/0191 - ETAG 020
a - b - c

RDD SK -with special hexagonal screw, zinc plated

RDD 8 x 100/ 20 SK[1]	**36276**	8	100	110	80	20	SW10	50
RDD 8 x 120/ 40 SK[1]	**36277**	8	120	130	80	40	SW10	50
RDD 8 x 140/ 60 SK[1]	**36278**	8	140	150	80	60	SW10	50
RDD 10 x 80/ 10 SK[1]	**36279**	10	80	90	70	10	SW13	50
RDD 10 x 100/ 20 SK	**36280**	10	100	110	80	20	SW13	50
RDD 10 x 120/ 40 SK	**36281**	10	120	130	80	40	SW13	50
RDD 10 x 140/ 60 SK	**36282**	10	140	150	80	60	SW13	50
RDD 10 x 160/ 80 SK	**36283**	10	160	170	80	80	SW13	50
RDD 10 x 180/100 SK	**36284**	10	180	190	80	100	SW13	50
RDD 10 x 200/120 SK	**36285**	10	200	210	80	120	SW13	50
RDD 10 x 230/150 SK	**36286**	10	230	240	80	150	SW13	50
RDD 10 x 260/180 SK	**36287**	10	260	270	80	180	SW13	50

ETA-08/0191 - ETAG 020
a - b - c

RDD SKS - with cylindrical collar and special hexagonal screw with integral washer, zinc plated, to anchor metal profiles

RDD 10 x 80/ 10 SKS[1]	**36302**	10	80	90	70	10	SW13/T40	50
RDD 10 x 100/ 20 SKS	**36303**	10	100	110	80	20	SW13/T40	50
RDD 10 x 120/ 40 SKS	**36304**	10	120	130	80	40	SW13/T40	50
RDD 10 x 140/ 60 SKS	**36305**	10	140	150	80	60	SW13/T40	50
RDD 10 x 160/ 80 SKS	**36306**	10	160	170	80	80	SW13/T40	50
RDD 10 x 180/100 SKS	**36307**	10	180	190	80	100	SW13/T40	50
RDD 10 x 200/120 SKS	**36308**	10	200	210	80	120	SW13/T40	50
RDD 10 x 230/150 SKS	**36509**	10	230	240	80	150	SW13/T40	50

Note:
- not pre-assembled from length 230
- more combinations upon request

[1] not part of approval

Technical Data

ETA-08/0191 - ETAG 020
a - b - c

RDD TX A4 - with special torx screw made of stainless steel A4/316

type	ref.-no.	ØD Ø plug Ø bit [mm]	LD plug length [mm]	LB min. drill depth [m	LV min. anchorage depth [mm]	S max. fixt. thickn. [mm]	bit/ SW	qty. per box pcs.
RDD 10 x 80/ 10 TX A4[1]	**36526**	10	80	90	70	10	T40	50
RDD 10 x 100/ 20 TX A4	**36527**	10	100	110	80	20	T40	50
RDD 10 x 120/ 40 TX A4	**36528**	10	120	130	80	40	T40	50
RDD 10 x 140/ 60 TX A4	**36529**	10	140	150	80	60	T40	50
RDD 10 x 160/ 80 TX A4	**36530**	10	160	170	80	80	T40	50
RDD 10 x 180/100 TX A4	**36531**	10	180	190	80	100	T40	50
RDD 10 x 200/120 TX A4	**36532**	10	200	210	80	120	T40	50
RDD 10 x 230/150 TX A4	**36533**	10	230	240	80	150	T40	50
RDD 10 x 260/180 TX A4	**36534**	10	260	270	80	180	T40	50

ETA-08/0191 - ETAG 020
a - b - c

RDD SK A4 - with special hexagonal screw made of stainless steel A4/31

RDD 10 x 80/ 10 SK A4[1]	**36514**	10	80	90	70	10	SW13	50
RDD 10 x 100/ 20 SK A4	**36515**	10	100	110	80	20	SW13	50
RDD 10 x 120/ 40 SK A4	**36516**	10	120	130	80	40	SW13	50
RDD 10 x 140/ 60 SK A4	**36517**	10	140	150	80	60	SW13	50
RDD 10 x 160/ 80 SK A4	**36518**	10	160	170	80	80	SW13	50
RDD 10 x 180/100 SK A4	**36519**	10	180	190	80	100	SW13	50
RDD 10 x 200/120 SK A4	**36520**	10	200	210	80	120	SW13	50
RDD 10 x 230/150 SK A4	**36521**	10	230	240	80	150	SW13	50
RDD 10 x 260/180 SK A4	**36522**	10	260	270	80	180	SW13	50

ETA-08/0191 - ETAG 020
a - b - c

RDD SKS A4 - with cylindrical collar and special hexagonal screw with integral washer, stainless steel A4/ 316, to anchor metal profiles

RDD 10 x 80/ 10 SKS A4[1]	**36535**	10	80	90	70	10	SW13/T40	50
RDD 10 x 100/ 20 SKS A4	**36536**	10	100	110	80	20	SW13/T40	50
RDD 10 x 120/ 40 SKS A4	**36537**	10	120	130	80	40	SW13/T40	50
RDD 10 x 140/ 60 SKS A4	**36538**	10	140	150	80	60	SW13/T40	50
RDD 10 x 160/ 80 SKS A4	**36539**	10	160	170	80	80	SW13/T40	50
RDD 10 x 180/100 SKS A4	**36540**	10	180	190	80	100	SW13/T40	50
RDD 10 x 200/120 SKS A4	**36541**	10	200	210	80	120	SW13/T40	50
RDD 10 x 230/150 SKS A4	**36542**	10	230	240	80	150	SW13/T40	50

ADK - cover caps for KEW frame plug

type	ref.-no. white	ref.-no. brown	Ø [mm]	to go with	qty. per box pcs.	outer carton pcs.
ADK RD 8 PZ	**34819**	**34820**	13,5	RDD 8 PZ	100	1000
ADK RD 10	**34817**	**34818**	16,0	RDD 10 TX	100	1000

Characteristic and allowable loads

Please consider the entire assessment documents RD/RDD - ETA-08/0191

Specifications for anchoring in concrete and masonry

anchor type			RD 10	RDD 10
drill nominal diameter	$d_0 =$	[mm]	10	10
drill hole depth	$h_1 \geq$	[mm]	60	90
effective anchorage depth	$h_{nom} = h_{ef} \geq$	[mm]	50	80
diameter of clearance hole in the fixture	$d_f \leq$	[mm]	10,5	10,5
characteristic bending resistance[1)]	$M_{Rk,s}$	[Nm]	11,8 / 13,7[2)]	11,8 / 13,7[2)]
allowed bending moment	$M_{Rk,s}$	[Nm]	6,7 / 6,2[2)]	6,7 / 6,2[2)]

component-dimension in concrete

anchor type					RD 10	RDD 10
minimum thickness of member		h_{min}	[mm]		100	110
concrete C12/15 (B15)	characteristic edge distances	$c_{cr,N}$	[mm]		70	100
	minimum edge distances	s_{min}	[mm]		70	105
	minimum spacing distances	c_{min}	[mm]		70	70
concrete ≥ C20/25	characteristic edge distances	$c_{cr,N}$	[mm]		50	70
	minimum edge distances	s_{min}	[mm]		50	75
	minimum spacing distances	c_{min}	[mm]		50	75

Characteristic centric resistance $N_{Rk,p}$[3)]

on a fixing point[7)i] in concrete without edge and spacing influence

anchor type				RD 10	RDD 10
concrete C12/15 (B15)	temperature range	24 °C / 40 °C[5)]	[kN]	2,0	3,5
		50 °C / 80 °C[5)]	[kN]	1,2	3,0
concrete ≥ C20/25 (B25 - B55)	temperature range	24 °C / 40 °C[5)]	[kN]	3,0	5,0
		50 °C / 80 °C[5)]	[kN]	2,0	4,0

allowable centric tension load N_{zul}

on a fixing point[7)]

anchor type				RD 10	RDD 10
concrete C12/15 (B15)	temperature range	24 °C / 40 °C[5)]	[kN]	0,8	1,4
		50 °C / 80 °C[5)]	[kN]	0,5	1,2
concrete ≥ C20/25 (B25 - B55)	temperature range	24 °C / 40 °C[5)]	[kN]	1,2	2,0
		50 °C / 80 °C[5)]	[kN]	0,8	1,6

characteristic shear resistance $V_{Rk,s}$[3)]

on a fixing point[7)i] in concrete without edge and spacing influence[4)]

anchor type		RD 10	RDD 10
concrete ≥ C12/15 (B15)	[kN]	7,1 / 8,3[2)]	7,1 / 8,3[2)]

allowable shear load V_{zul}

on a fixing point[7)i] in concrete without edge and spacing influences[4)]

anchor type		RD 10	RDD 10
concrete ≥ C12/15 (B15)	[kN]	4,0 / 3,8[2)]	4,0 / 3,8[2)]

characteristic resistance F_{Rk}[6)]

of a fastening point[7)] for centrical tension, transverse load or diagonal pull at any angle in the brickwork

base material	min. DF or min. size	bulk density class	minimum compressive strength	temperature range	characteristic resistance F_{Rk}[6)] [kN]	
	(L x W x H)	ρ	f_b			
	[mm]	[kg/dm³]	[N/mm²]		RD	RDD
Clay brick	NF	≥ 1,8	10	24 °C / 40 °C[5)]	1,5	3,0 / 3,5[8)]
MZ 20-1,8-NF	(240x116x71)			50 °C / 80 °C[5)]	1,5	3,0 / 3,5[8)]
according to			20	24 °C / 40 °C[5)]	2,5	4,0 / 5,0[8)]
EN 771-1:2011				50 °C / 80 °C[5)]	2,0	4,0 / 5,0[8)]
Solid sand-lime brick	NF	≥ 1,8	10	24 °C / 40 °C[5)]	2,0	3,0 / 3,5[8)]
KS 12-1,0-2DF	(240x115x70)			50 °C / 80 °C[5)]	1,5	3,0
according to			20	24 °C / 40 °C[5)]	3,0	4,0 / 5,0[8)]
EN 771-2:2011				50 °C / 80 °C[5)]	2,0	4,0

allowable load F_{zul}

of a fastening point[7)] for centrical tension, transverse load or diagonal pull at any angle in the brickwork

base material	min. DF or min. size	bulk density class	minimum compressive strength	temperature range	allowable load F_{zul} [kN]	
	(L x W x H)	ρ	f_b			
	[mm]	[kg/dm³]	[N/mm²]		RD	RDD
Clay brick	NF	≥ 1,8	10	24 °C / 40 °C[5)]	0,4	0,9 / 1,0[8)]
MZ 20-1,8-NF	(240x116x71)			50 °C / 80 °C[5)]	0,4	0,9 / 1,0[8)]
according to			20	24 °C / 40 °C[5)]	0,7	1,1 / 1,4[8)]
EN 771-1:2011				50 °C / 80 °C[5)]	0,6	1,1 / 1,4[8)]
Solid sand-lime brick	NF	≥ 1,8	10	24 °C / 40 °C[5)]	0,6	0,9 / 1,0[8)]
KS 12-1,0-2DF	(240x115x70)			50 °C / 80 °C[5)]	0,4	3,0
according to			20	24 °C / 40 °C[5)]	0,9	1,1 / 1,4[8)]
EN 771-2:2011				50 °C / 80 °C[5)]	0,6	1,1

Frame Plug - RD/RDD

Characteristic and allowable loads

Please consider the entire assessment documents RD/RDD - ETA-08/0191

characteristic resistance F_{Rk} [6]

of a fastening point[7] for centrical tension, transverse load or diagonal pull at any angle in the brickwork made of hollow bricks or perforated bricks

base material	min. DF or min. size (L x W x H) [mm]	bulk density class ρ [kg/dm³]	minimum compressive strength f_b [N/mm²]	temperature range	characteristic resistance F_{Rk} [6] [kN] RDD
Clay brick MZ 20-1,8-NF according to EN 771-1:2011	2DF (240x115x115)	≥ 1,0	12	24 °C / 40 °C[5]	1,2
				50 °C / 80 °C[5]	0,9
Solid sand-lime brick KS 12-1,0-2DF according to EN 771-2:2011	8DF (250x240x237)	≥ 1,4	12	24 °C / 40 °C[5]	2,0
				50 °C / 80 °C[5]	1,5

allowable load F_{zul}

of a fastening point[7] for centrical tension, transverse load or diagonal pull at any angle in the brickwork made of hollow bricks or perforated bricks

base material	min. DF or min. size (L x W x H) [mm]	bulk density class ρ [kg/dm³]	minimum compressive strength f_b [N/mm²]	temperature range	allowable load F_{zul} [kN] RDD
Clay brick MZ 20-1,8-NF according to EN 771-1:2011	2DF (240x115x115)	≥ 1,0	12	24 °C / 40 °C[5]	0,3
				50 °C / 80 °C[5]	0,3
Solid sand-lime brick KS 12-1,0-2DF according to EN 771-2:2011	8DF (250x240x237)	≥ 1,4	12	24 °C / 40 °C[5]	0,6
				50 °C / 80 °C[5]	0,4

[1] if there are no other national regulations, the partial safety coefficients γ_{Ms} 1.25 for electrolytically galvanised steel and γ_{Ms} 1.56 for stainless steel A4 have to be observed.
[2] only applies for stainless steel A4
[3] If there are no other national regulations for the calculation of the admissible loads, the partial safety coefficients γ_{Ms} of 1.8 and g_F of 1.4 have to be observed.
[4] Distance from the edge c1; c2 ≥ 160mm and component thickness ≥ 150mm
If tensile force and transverse force are acting simultaneously, the approval document ETA-08/191 and the dimensioning procedure according to ETAG 020, appendix C, must be observed.
[5] At the temperature ranges q = 24 °C / 40 °C and q = 50 °C / 80 °C, the first number indicates the maximum air temperature, and the second one indicates the maximum short-term temperature.
[6] If there are no other national regulations for the calculation of the admissible loads, the partial safety coefficients γ_{Mm} von 2,5 and γ_F von 1,4 have to be observed..
[7] A fastening point can consist of an individual dowel or of a group of dowels, consisting of two dowels s = s or four dowels s = s.
At an axial distance of more than 65 mm for the RD 10, and more than 85 mm at the RDD 10, the dowels in the concrete are considered as individual dowels.
If tensile force and transverse force are acting simultaneously, the approval document ETA-08/191 and the dimensioning procedure according to ETAG 020, appendix C, must be observed.
[8] Only applies for a distance from the edge c =150mm; intermediate values may be interpolated.

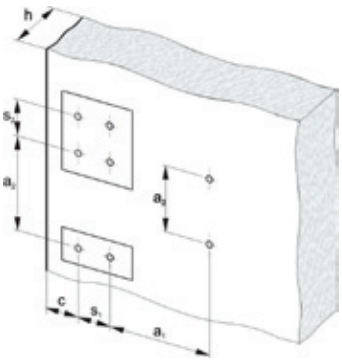

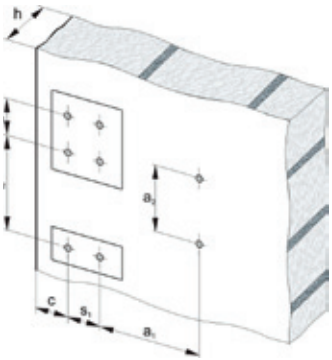

Window Frame Screw - FRS

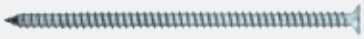

Window Frame Screw, countersunk head FRS S

Window Frame Screw, cylindrical head FRS Z

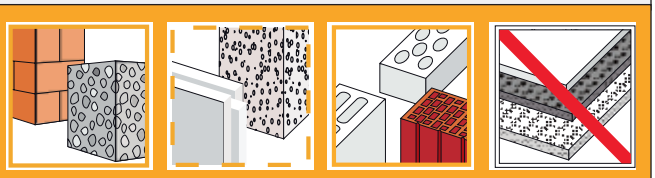

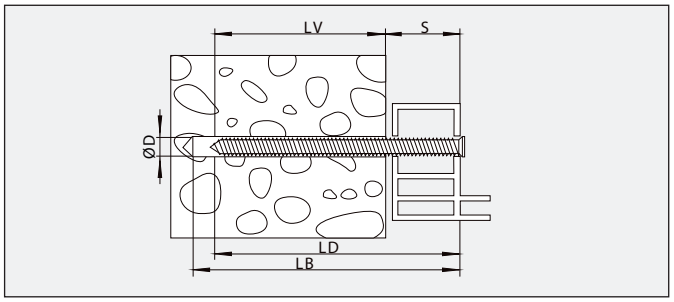

Suitability

Base materials:
concrete, solid masonry, perforated bricks, hollow blocks, light concrete and natural stone, limited suitability for aircrete

For fixing of:
window and door frames made of wood, plastic material or metal, fireproof doors, battens

Characteristics

- special screw for spaced fixings without plug
- at choice: countersunk head (FRS S) or cylincrical head head (FRS Z)

Advice

The drill hole must be cleaned (use brush and air-pump). In case of light/soft base material make sure to drill without percussion/ hammer action.

Base materials	LV min. anchor-age depth [mm]	S max. fixture thickness, for screw length [mm] 52	72	92	112	132	152	182	212
concrete	30	22	42	62	82	102	122	152	182
sand lime stone	40	12	32	52	72	92	112	142	172
solid bricks	40	12	32	52	72	92	112	142	172
pumice	50	-	22	42	62	82	102	132	162
light concr./ aircrete	60	-	12	32	52	72	92	122	152
perforated bricks	60	-	12	32	52	72	92	122	152

Technical Data

FRS S - With countersunk head

type	ref.-no.	Ø S screw [mm]	LS screw lenght [mm]	Ø drill bit [mm]	LB min. drill depth [mm]	T-bit size	qty. per box pcs.
FRS 7,5 x 52 S	**35801**	7,5	52	6	67	T30	100
FRS 7,5 x 72 S	**35098**	7,5	72	6	87	T30	100
FRS 7,5 x 92 S	**35099**	7,5	92	6	107	T30	100
FRS 7,5 x 112 S	**33743**	7,5	112	6	127	T30	100
FRS 7,5 x 132 S	**33744**	7,5	132	6	147	T30	100
FRS 7,5 x 152 S	**33745**	7,5	152	6	167	T30	100
FRS 7,5 x 182 S	**33746**	7,5	182	6	197	T30	100
FRS 7,5 x 212 S	**35802**	7,5	212	6	227	T30	100

FRS Z - With cylindrical head

FRS 7,5 x 52 Z	**35803**	7,5	52	6	67	T25	100
FRS 7,5 x 72 Z	**35690**	7,5	72	6	87	T25	100
FRS 7,5 x 92 Z	**35691**	7,5	92	6	107	T25	100
FRS 7,5 x 112 Z	**33747**	7,5	112	6	127	T25	100
FRS 7,5 x 132 Z	**33748**	7,5	132	6	147	T25	100
FRS 7,5 x 152 Z	**33749**	7,5	152	6	167	T25	100
FRS 7,5 x 182 Z	**33750**	7,5	182	6	197	T25	100
FRS 7,5 x 212 Z	**35804**	7,5	212	6	227	T25	100

ADK

type	ref.-no.	Ø [mm]	to go with	qty. per box pcs.
ADK T 25 white	**34821**	10	FRS Z	100
ADK T 25 darkbrown	**34822**	10	FRS Z	100
ADK F 10 white	**32119**	15	FRS S	100
ADK F 10 darkbrown	**32122**	15	FRS S	100

Pullout loads in kN

	hollow blocks Hlz 12	hollow bricks KSL 12	concrete C 20/25	aircrete P2
KEW FRS S	1,0	5,4	7,1	0,7

the loads stated are failure loads valid for general fixings and confirmed strength of the base material indicated. Lower loads apply in case of render, insulating material, non load bearing areas of the base material or too small edge/joint distances. An adequate safety factor should be applied.

Installation

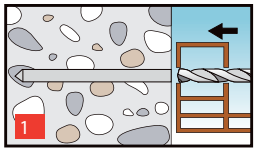

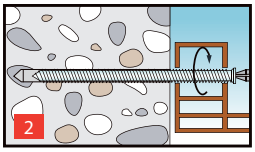

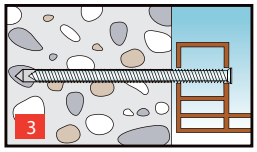

Window Frame Plug - FRD

Window frame plug with lens head
FRD U

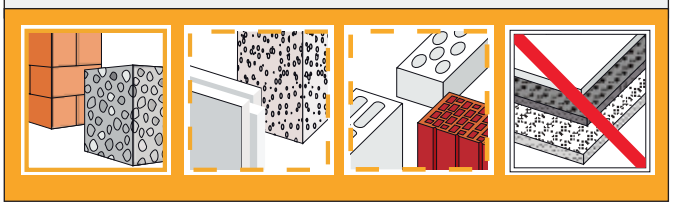

Advice

The window frame plug may only be used as through-fixing. The fixture may not be positioned between screw head and plug collar.
If installed in hollow base material the plug should be long enough to at least allow for expansion in the second brick chamber.
The maximum tightening moment is 5 Nm.

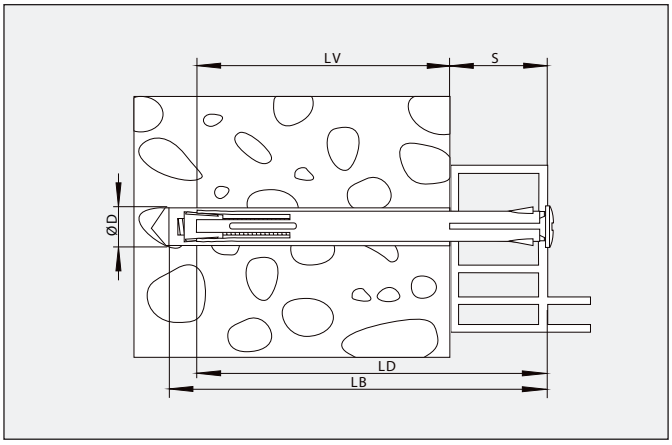

Suitability

Base materials:
concrete, solid materials, limited suitability for perforated bricks, hollow blocks, aircrete

For fixing of:
window and door frames made of wood, plastic or metal, fireproof doors, battens

Characteristics

- all-metal plug with high shear load bearing capacities, ideal for spaced fixings
- 3 head styles at choice: FRD U = universal countersunk, FRD L = lens head, FRD K = lens head with integral washer
- FRD U for wooden profiles and thickwalled hollow profiles
- FRD L / FRD K for hollow profiles of metal or plastic
- with locking lugs to firmly hold hollow profiles
- aper nut does not rotate in sleeve and cannot fall off

Pullout loads in kN

	concrete C20/25	Solid bricks Mz 12	hollow bricks KSI 6
FRD K8/I8	3,1	3,5	1,0
FRD L10/U	5,4	5,1	2,1

the loads stated are failure loads valid for general fixings and confirmed strength of the base material indicated. Lower loads apply in case of render, insulating material, non load bearing areas of the base material or too small edge/joint distances. An adequate safety factor should be applied.

Installation

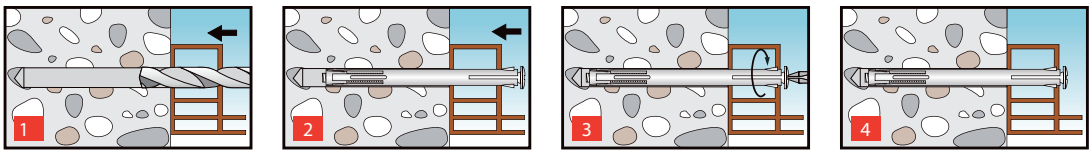

Window Frame Plug - FRD

Technical Data

FRDU - with universal countersunk head

type	ref.-no.	ØD Ø Plug Ø Bit [mm]	LD plug length [mm]	LB min. drill depth [mm]	LV min. an-chorage depth [mm]	S max. fixture thickn. [mm]	Ø screw head [mm]	qty. per box pcs.
FRD U 10 x 52	**32095**	10	52	70	30	22	13	100
FRD U 10 x 72	**32096**	10	72	90	30	42	13	100
FRD U 10 x 92	**32097**	10	92	110	30	62	13	100
FRD U 10 x 112	**32098**	10	112	130	30	82	13	100
FRD U 10 x 132	**32099**	10	132	150	30	102	13	100
FRD U 10 x 152	**32100**	10	152	170	30	122	13	100
FRD U 10 x 182	**32101**	10	182	200	30	152	13	100
FRD U 10 x 202	**32102**	10	202	220	30	172	13	100

Technical Data

ADK Z10 ADK F10

type	ref.-no.	Ø [mm]	to go with	qty. per box pcs.
ADK Z 10 white	**32114**	16	FRD U, L, C	100
ADK Z 10 grey	**32115**	16	FRD U, L, C	100
ADK Z 10 light brown	**32116**	16	FRD U, L, C	100
ADK Z 10 dark brown	**32117**	16	FRD U, L, C	100
ADK Z 10 black	**32118**	16	FRD U, L, C	100
ADK F 10 white	**32119**	15	FRD U, C	100
ADK F 10 grey	**32120**	15	FRD U, C	100
ADK F 10 light brown	**32121**	15	FRD U, C	100
ADK F 10 dark brown	**32122**	15	FRD U, C	100
ADK F 10 black	**32123**	15	FRD U, C	100

Window Frame Plug Combi - FRD C

Window frame plug Combi
FRD C
steel, zinc plated

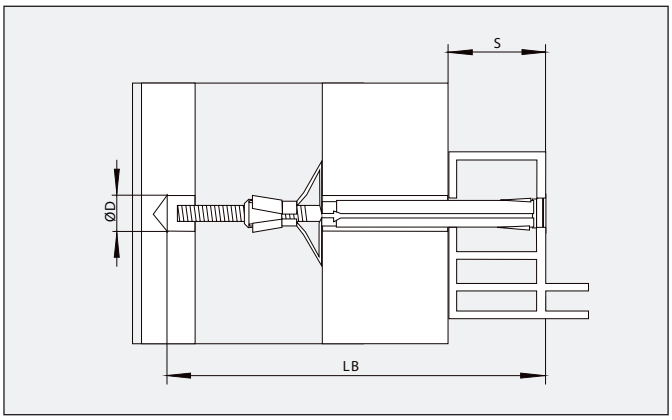

Suitability

Base materials:
concrete, solid materials, perforated bricks, hollow blocks, aircrete

For fixing of:
window and door frames made of wood,
plastic or metal, fireproof doors, battens

Characteristics

- all-metal plug with high shear load bearing capacities, ideal for spaced fixings
- with universal countersunk head for wooden profiles and thickwalled hollow profiles
- with locking lugs to firmly hold profiles
- taper nut does not rotate in sleeve and cannot fall off
- Anchors sleeve with triple expansion part to ensure safe anchorage even in cavities and soft base materials

Technical Data

FRD C - with universal countersunk head and triple

type	ref.-no.	ØD Ø Plug Ø Bit [mm]	LD plug length [mm]	LB min. drill depth [mm]	LV min. anchorage depth [mm]	S max. fixture thickn. [mm]	Ø screw head [mm]	qty. per box pcs.
FRD C 10 x 112	**32103**	10	112	130	65	47	13	100
FRD C 10 x 132	**32104**	10	132	150	65	67	13	100
FRD C 10 x 152	**32105**	10	152	170	65	87	13	100
FRD C 10 x 182	**32106**	10	182	200	65	117	13	100
FRD C 10 x 202	**32107**	10	202	220	65	137	13	100

Advice

The window frame plug may only be used as through-fixing. The fixture may not be positioned between screw head and plug collar.
If installed in hollow brick the plug should be long enough to at least allow for expansion in the second brick chamber.
The maximum tightening moment is 5 Nm.

Pullout loads in kN

	hollow blocks Hlz 12	solid bricks Mz 12	concrete C 20/25	aircrete P2/P4
FRD C 10	0,7	5,9	5,7	0,6/1,0

the loads stated are failure loads valid for general fixings and confirmed strength of the base material indicated. Lower loads apply in case of render, insulating material, non load bearing areas of the base material or too small edge/joint distances. An adequate safety factor should be applied.

Installation

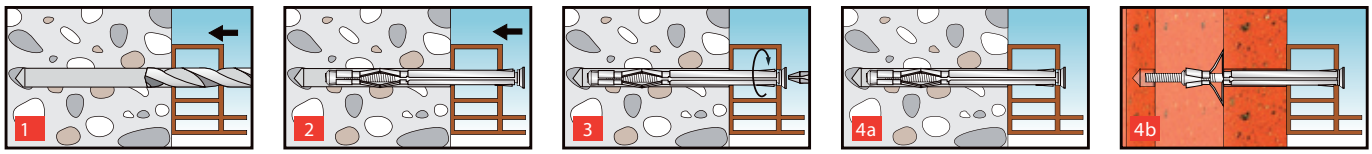

NYLON WARRANTY

Adjusting Wedge - BMK

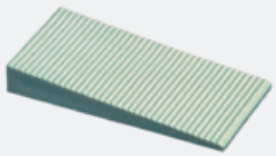

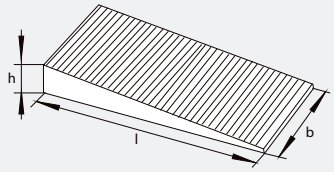

Anwendung

Wedging and adjusting jobs in various construction areas, to install windows, doors, laths, etc.

Characteristics

- sliding two wedges over each other alows for exact adjustment of building components
- the toothed surfaces of the uper sides ensure optimal wedging

Technical Data

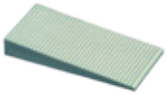

BMK - to adjust construction parts

type	ref.-no.	l length [mm]	b width [mm]	h height [mm]	qty. per box pcs.	outer carton pcs.
BMK 6	**30665**	40	20	6	100	1600
BMK 9	**30666**	60	30	9	35	560
BMK 18	**30667**	85	40	18	35	280
BMK 27	**30668**	115	50	27	12	96
BMK 36	**30669**	160	60	36	6	48

Spacer Unit - ASH

Spacer Unit ASH

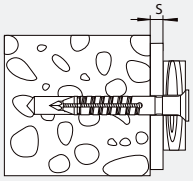

Anwendung

adjusting wooden sub-structures and claddings, fixing windows and doors onto uneven base materials

Characteristics

- fast and simple installation
- Adjustment to the mm, with colour coding system
- ust push between construction part and masonry
- Universal for plugs and srews Ø 6mm to 11mm

Technical Data

ASH - to adjust, bridge, straigthen

type	ref.-no.	length x width [mm]	S thickness [mm]	color	qty. per box pcs.	outer carton pcs.
ASH 3	**33578**	50 x 50	3	red	50	1200
ASH 5	**33579**	50 x 50	5	yellow	50	800
ASH 8	**33580**	50 x 50	8	blue	50	600
ASH 10	**33581**	50 x 50	10	black	50	500
ASH 15	**33582**	50 x 50	15	natur	50	500

Notes

Cavity Fixings

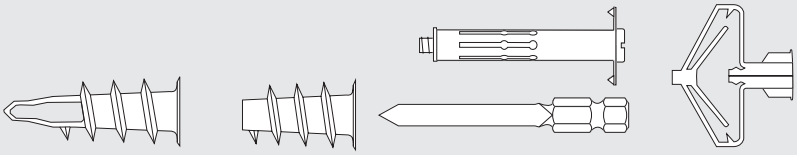

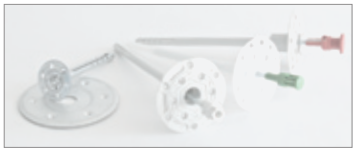

Metal Hollow Wall Plug - MHD

Metal hollow wall plug
MHD

Metal hollow wall
plug, angle hook
MHD WH

Metal hollow wall
plug, round hook
MHD RH

Metal hollow wall
plug, eye screw
MHD Oe

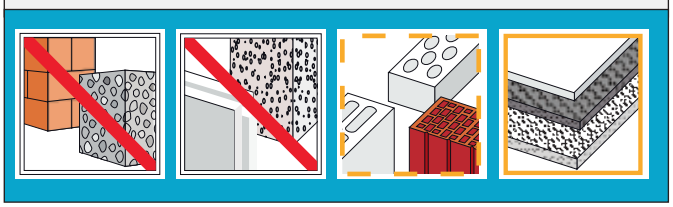

Characteristics

- multiple split plug with pre-installed metric screw
- simple installation with screw driver or setting tool
- once collapsed the segments form a large supporting area at the rear side for improved holding power
- screw may be removed at any time without loss of holding power
- now also available: with round hook, angle hook and eye screw

Advice

Installation with screw driver or cordless drill is finished once the screw is noticeably tightened.
In case of soft boards use metal drill bit and drill with rotary action only.

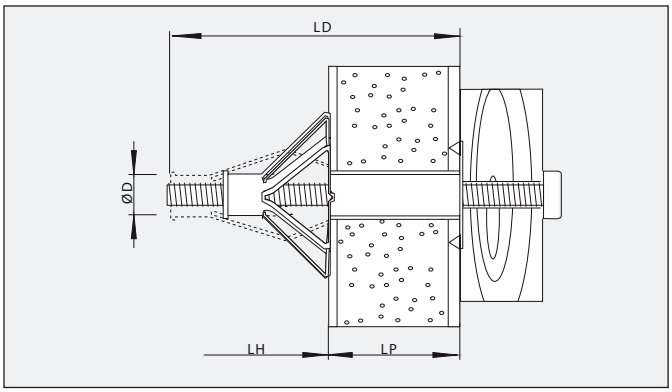

Suitability

Base materials:
panels, boards, hollow ceilings with large cavities, limited suitability for hollow blocks

For fixing of:
picture frames, lamps, skirting boards, key boxes, shelves, wall-mounted cup-boards, towel rails, curtain rails

Pullout loads in kN

	gypsum plasterboard 12.5 mm	gypsum plasterboard 2 x 12.5 mm
MHD 4 x 12	0,3	-
MHD 5 x 16	0,7	-
MHD 6 x 16	0,8	-
MHD 4 x 24	-	0,6
MHD 5 x 24	-	1,0
MHD 6 x 24	-	1,0

the loads stated are failure loads valid for general fixings and confirmed strength of the base material indicated. An adequate safety factor should be applied.

Installation

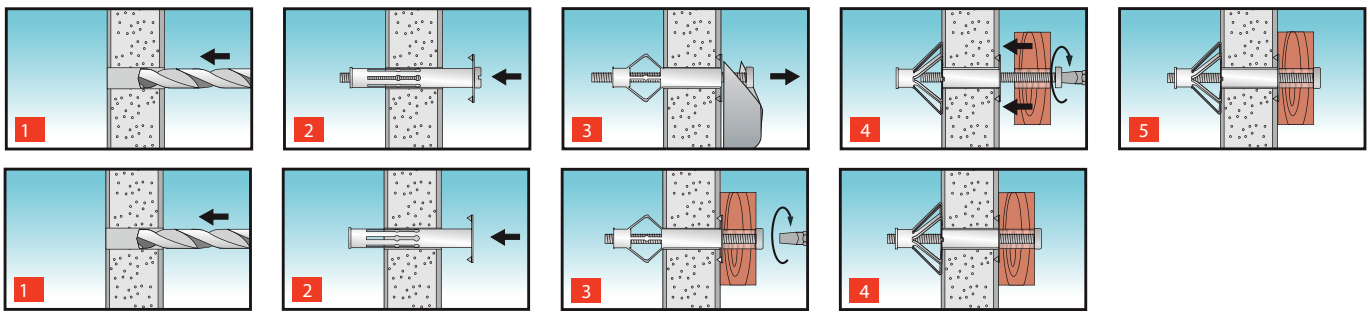

Metal Hollow Wall Plug - MHD

Technical Data

MHD - zinc plated, with metric screw

type	ref.-no	ØD Ø plug Ø bit [mm]	LD plug length [mm]	LP board thickn. min./max. [mm]	LV min. cavity depth [mm]	screw Ø x l [mm]	qty. per box pcs.	outer carton pcs.
MHD 4 x 6	**36940**	8	22	- 6	25	M 4 x 30	50	2700
MHD 4 x 12	**36941**	8	32	3 - 12	36	M 4 x 39	50	1800
MHD 4 x 24	**36942**	8	46	14 - 24	36	M 4 x 52	50	1350
MHD 4 x 38	**36943**	8	60	32 - 38	31	M 4 x 65	50	1350
MHD 5 x 12	**36944**	10	37	6 - 12	39	M 5 x 45	50	1350
MHD 5 x 16	**36945**	10	52	3 - 16	55	M 5 x 58	50	800
MHD 5 x 24	**36946**	10	65	14 - 24	57	M 5 x 71	50	800
MHD 5 x 38	**36947**	10	80	27 - 38	61	M 5 x 88	50	400
MHD 6 x 13	**36948**	12	37	6 - 13	39	M 6 x 45	50	800
MHD 6 x 16	**36949**	12	52	3 - 16	55	M 6 x 58	50	400
MHD 6 x 24	**36950**	12	65	14 - 24	57	M 6 x 71	50	400
MHD 6 x 38	**36951**	12	80	27 - 38	61	M 6 x 88	50	400
MHD 8 x 16[1]	**36688**	13	55	3 - 16	55	M 8 x 65	25	400
MHD 8 x 32[1]	**36689**	13	68	14 - 32	57	M 8 x 75	25	400

[1] mit metrischer Sechskant-Schraube

MHD WH - zinc plated, with angle hook

MHD 5 x 16 WH	**36683**	10	52	3-16	55	M 5 x 60	25	400
MHD 6 x 24 WH	**36686**	12	65	14 - 24	57	M 6 x 70	25	400

MHD RH - zinc plated, with round hook

MHD 5 x 16 RH	**36682**	10	52	3 - 16	55	M 5 x 60	25	400
MHD 6 x 24 RH	**36685**	12	65	14 - 24	57	M 6 x 70	25	400

MHD Oe - zinc plated, with eye screw

MHD 5 x 16 Oe	**36684**	10	52	3 - 16	55	M 5 x 60	25	400
MHD 6 x 24 Oe	**36687**	12	65	14 - 24	57	M 6 x 70	25	400

Technical Data

HMZ 1 - setting tool PRO

HMZ 2 - setting tool DIY

type	ref.-no.	qty. per box pcs.
HMZ 1	**30945**	1
HMZ 2	**30784**	1

plasterboardbox - Assortmant kit small

type	ref.-no.	qty. per box pcs.	outer carton pcs.	contents
plasterboardbox 120 pcs	**38036**	1	13	8 plug KHD 10x50, 30 plug GKD, 1 Setting tool SW, 14 plug GKD M, 32 chipboard screws 4,0 x 40, 8 chipboard screws 4,0 x 60, 4 round hook 4,2 x 65, 8 angle hook white 4,4 x 40

plasterboardbox - Assortmant kit medium

type	ref.-no.	qty. per box pcs.	outer carton pcs.	contents
plasterboardbox 235 pcs	**38044**	1	12	12 plug KHD 10x50, 60 plug GKD, 1 Setting tool SW, 25 plug GKD M, 20 plug SP 8, 65 chipboard screws 4,0 x 40, 12 chipboard screws 4,0 x 60, 20 chipboard screws 5,0 x 50, 4 round hook 4,2 x 65, 16 angle hook white 4,4 x 40

plasterboardbox - Assortmant kit large

type	ref.-no.	qty. per box pcs.	outer carton pcs.	contents
plasterboardbox 462 pcs	**37745**	1	8	20 plug KHD 10x50, 40 plug GKD, 1 Setting tool SW, 40 plug GKD M, 80 plug SU K 6, 30 plug SU K 6L, 30 plug SU K 8, 40 plug MHD 4x12, 40 plug MHD 5x12, 40 plug MHD 5x16, 1 setting tool, 80 chipboard screws 4,0 x 40, 20 chipboard screws 4,0 x 60

NYLON WARRANTY

Nylon Hollow Wall Plug - KHD

Nylon hollow wall plug
KHD

Expansion screw, zinc plated and blue chromated

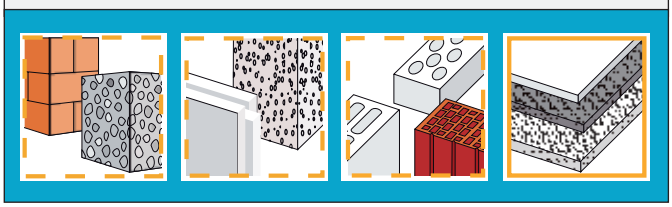

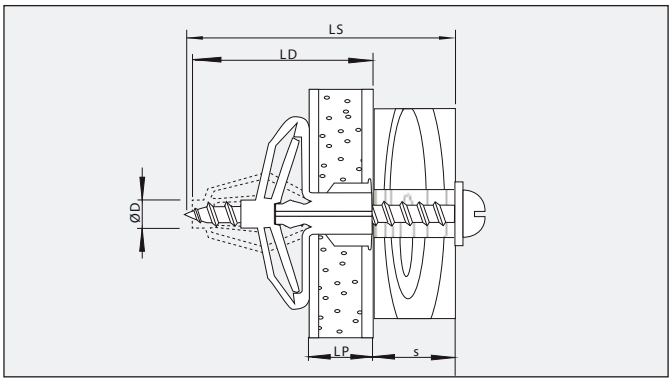

*** min. screw length**

	plug length	LD
+	fixture thickness	S
=	min. screw length	LS

Suitability

Base materials:
panels and boards such as plasterboard, gypsum fibreboards, fibre cement boards, hardboards, chipboards, limited suitability for concrete and masonry, hollow blocks, hollow bricks

For fixing of:
all objects which can be fixed with wood and chipboard screws: picture frames, lamps, shelves, wall-mounted cup-boards, skirting boards, soap dishes, towel rails, letter boxes, movement alarm units, flower baskets, curtain rails

Characteristics

- suitable for nearly all kinds of base materials, especially to fix objects to boards and panels
- optimal suitability for single and double plasterboards
- collar with edges prevents plug from rotating
- Collar prevents plug to slip into hole

Advice

If installed in hollow bricks or boards/ panels
hooks and eye screws with integral collar must be used to make sure that the plug form locks in the substrate (folding open).

Technical Data

KHD - nylon hollow wall plug

type	ref.-no.	ØD Ø Plug Ø Bit [mm]	LD plug lenght [mm]	LP board thickn. min/max [mm]	S screw [mm]	s fixture thick-ness [mm]	qty. per box pcs.	outer carton pcs.
KHD 10 x 50	**33389**	10	50	10	3,5 - 4,0		100	800

KHD SP - nylon hollow wall plug with chipboard screw

KHD 10 x 50 SP	**33390**	10	50	10	4,0 x 60,0	10	100	800

Pullout loads in kN

	gypsum plasterboard 12.5 mm	gypsum plasterboard 2 x 12.5 mm
KHD 10	0,73	1,04

the loads stated are failure loads valid for general fixings and confirmed strength of the base material indicated. An adequate safety factor should be applied.

Installation

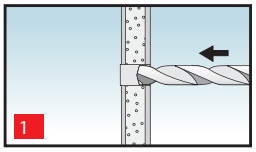

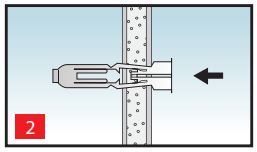

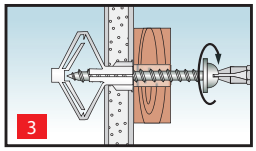

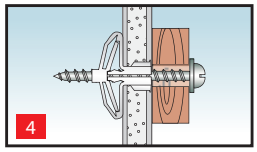

Spring Toggle - FK

Spring toggle
with rimmed
brass nut
FKB
steel, zinc plated

Spring toggle
with washer and
hexagon nut
FK

Spring toggle
with round hook
FKH

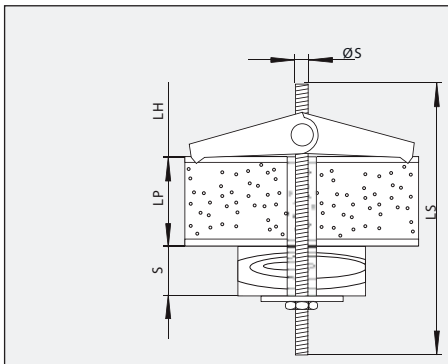

Suitability

Base materials:
plasterboard, gypsum fibreboards, chipboards, fibre cement boards, hardboards, hollow brick and hollow block ceilings

For fixing of:
picture frames, lamps, skirting boards, key boxes, small shelves, light wall-mounted cup-boards, towel rails, curtain rails, pipe and cable clamps, cable ducts

Characteristics

- Smetal plug designed for cavities
- steel springs expand the two legs automatically inside the cavity
- extra long threaded stud for larger wall thicknesses
- at choice: stud with rimmed brass nut (FKB), stud with washer and nut (FK), stud with round hook (FKH)

Advice

The measurements LH (min. cavity depth) and LP (max. panel thickness + fixture thickness) must be observed when installing the toggle.

Technical Data

FK B - with stud and rimmed brass nut

type	ref.-no.	ØS thread [mm]	LS stud length [mm]	ØB drill dia. [mm]	LP (+S) max. board thickness (+fixture) [mm]	LH min. cavity depth [mm]	qty. per box pcs.	outer carton pcs.
FKB M 3 x 90	**33765**	M3	90	12	75	26	25	400
FKB M 4 x 100	**33766**	M4	100	14	80	35	25	400

FK - with stud, washer and hexagon nut

FK M 3 x 90	**34367**	M3	90	12	75	26	25	400
FK M 4 x 100	**31061**	M4	100	14	80	35	25	400
FK M 5 x 100	**36738**	M5	100	16	80	45	20	320

FKH - with round hook

FKH M 3 x 50	**33764**	M3	50	12	45	26	25	400
FKH M 4 x 70	**31062**	M4	70	14	30	34	25	400
FKH M 5 x 70	**36739**	M5	70	16	50	45	20	160

Pullout loads in kN

	gypsum plasterboard 12,5 mm	gypsum plasterboard 2 x 12,5 mm
FKB / FK M3	0,6	0,6
FKB / FK M4	0,9	1,2

the loads stated are failure loads valid for general fixings and confirmed strength of the base material indicated. An adequate safety factor should be applied.

Installation

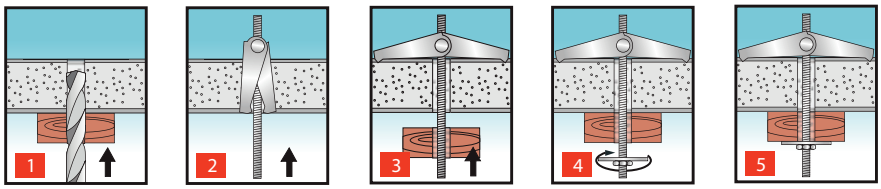

Plasterboard Plug, plastic - GKD

Plasterboard plug
GKD

Setting tool - SW

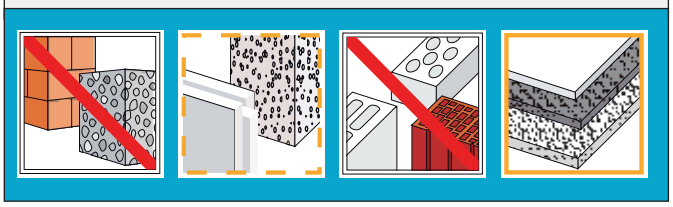

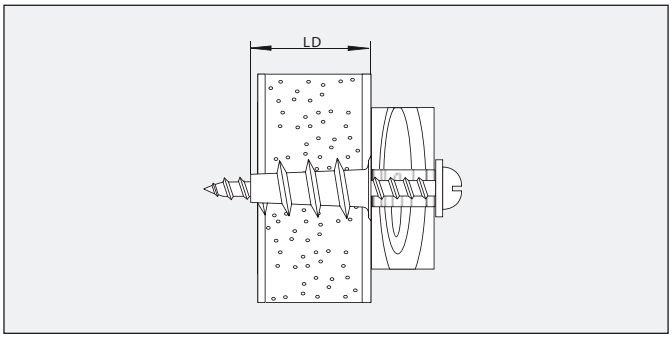

Suitability

Base materials:
plasterboard, limited suitability for gypsum plates and aircrete

For fixing of:
all objects which can be fixed with wood and chipboard screws:
picture frames, lamps, skirting boards, key boxes, spice shelves

Characteristics

- time saving fixing system consisting of plug and setting tool
- self undercutting system ensures optimal anchorage
- non conductive plastic material for electrical applications
- reuseable setting tool

Advice

Board thicknesses exceeding 15 mm and aircrete require pre-drilling with the setting tool.
The GKD is not suited for gypsum fibreboards and tiled plasterboards.

Technical Data

type	ref.-no.	LD plug lenght [mm]	ØS Ø wood screw [mm]	ØS Ø chip-board screw [mm]	ØS Ø tap screw [mm]	qty. per box pcs.	outer carton pcs.
GKD	**31075**	24	4,0 - 5,5	4,0 - 6,0	4,2 - 5,5	200	3200

SW - setting tool

SW	**31076**					10	50

GKD SW - plasterboard plug with setting tool

GKD SW	**31077**	24	4,0 - 5,5	4,0 - 6,0	4,2 - 5,5	200+1	3200+16
GKD SW	**32680**	24	4,0 - 5,5	4,0 - 6,0	4,2 - 5,5	50+1	2700+54

GKD SWS - plasterboard plug with setting tool and chipboard screw

GKD SWS	**32681**	24		4,0 x 40,0		50+1	1800+36

Pullout loads in kN

	gypsum plasterboard 9,5 mm	gypsum plasterboard 12,5 mm	gypsum plasterboard 2 x 12.5 mm
GKD	0,46	0,57	0,75

the loads stated are failure loads valid for general fixings and confirmed strength of the base material indicated. An adequate safety factor should be applied

Installation

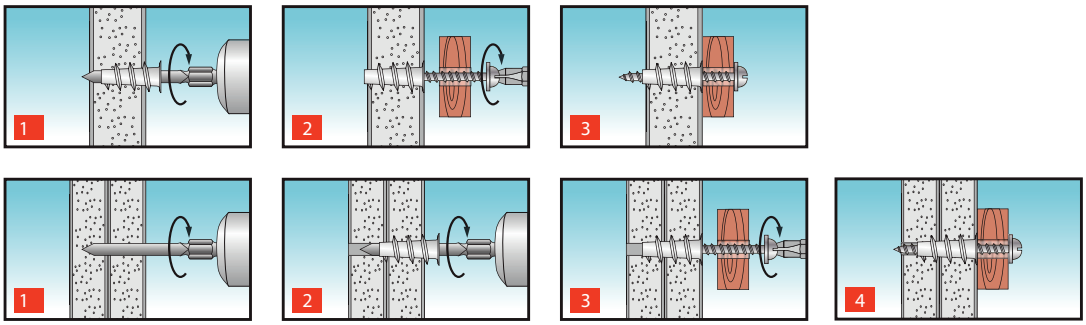

Plasterboard Plug, metal - GKD M

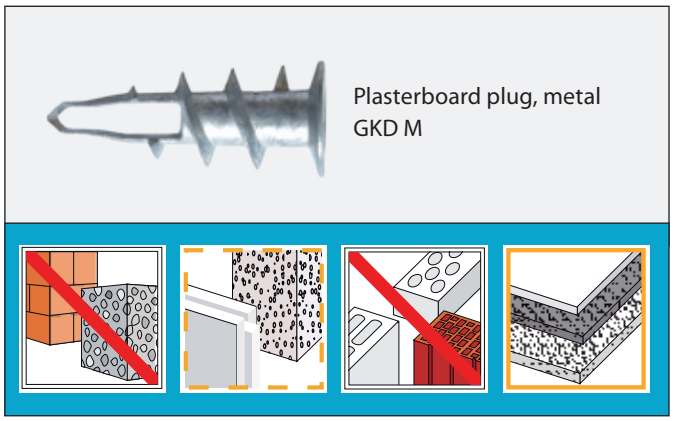

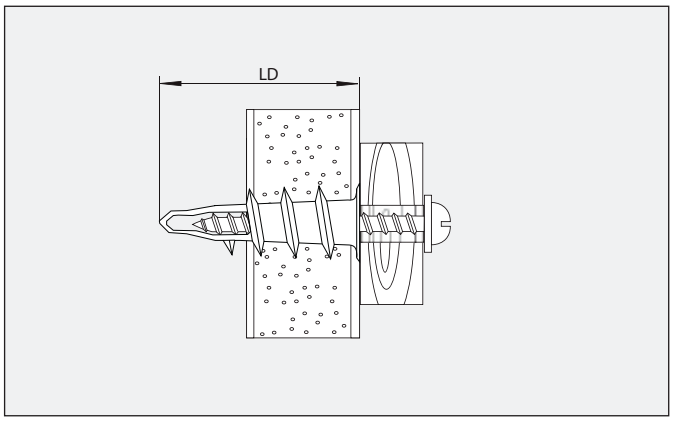

*** min. screw length**

	plug length	LD
+	fixture thickness	S
=	min. screw length	LS

Suitability

Base materials:
plasterboard, limited suitability for gypsum plates and aircrete

For fixing of:
all objects which can be fixed with wood and chipboard screws:
picture frames, lamps, skirting boards, key boxes, spice shelves

Characteristics

- time saving fixing system
- self undercutting system ensures optimal anchorage
- simple installation with cross head screw driver, manually or with electric drill
- no special setting tool needed
- sharp blade shaped threads
- heat resistant

Advice

The GKD M is not suited for tiled plasterboards.

Technical Data

GKD M - plasterboard plug of zinc diecast

type	ref.-no.	LD plug length [mm]	ØS Ø Chip-board [mm]	qty. per box pcs.	outer carton pcs.
GKD M	**35142**	34	4,0 - 5,0	200	1600
GKD M	**35143**	34	4,0 - 5,0	50	1800

Pullout loads in kN

	plasterboard 9,5 mm	plasterboard 12.5 mm	plasterboard 2 x 12.5 mm	gypsum fibreboard 10,0 mm	gypsum fibreboard 12,5 mm
GKD M	0,46	0,56	0,75	0,55	0,89

the loads stated are failure loads valid for general fixings and confirmed strength of the base material indicated. An adequate safety factor should be applied

Installation

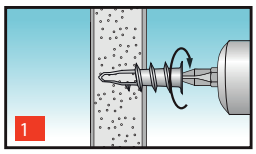

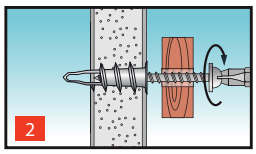

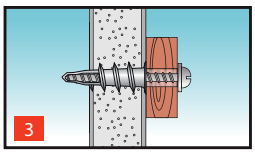

Notes

Heavy Duty Metal Fixings

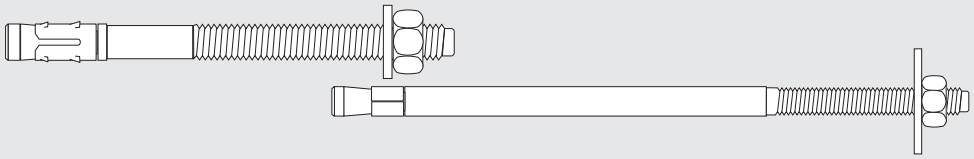

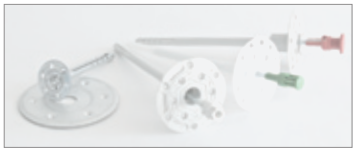

Stud anchor - S-KA, S-KAH, B-U

Fire resistance classification F 120 as shown ETAG 020

ETA-08/0173 - ETAG 001 Option 1 — for S-KA, S-KAH

ETA-01/0013 - ETAG 001 Option 7 — for B-U

stud anchor S-KA

stud anchor S-KAH A4

stud anchor B-U

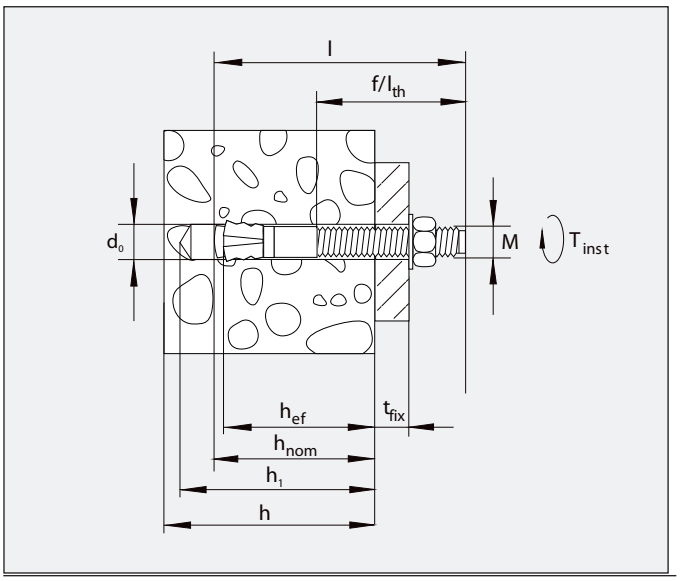

Notes

Requirements of European Technical Approvals ETA 01/0013, Option 7 (B-U) and ETA-08/0173, Option 1 (S-KA, S-KAH) must be met.

Suitability

Approved for:
S-KA, S-KAH A4 - cracked and uncracked concrete C20/25 to C50/60
B-U - uncracked concrete C20/25 to C50/60
Also suitable for:
Concrete B15 to B55, dense-textured natural stone

For fixing of:
Steel (and wood) structures, facade and window elements, railings, brackets, machines, stairs, doors, etc.

Characteristics

- stud anchor for time-saving through-bolt assembly
- high bearing capacity at low centre-to-centre and edge distances
- flexible use for medium and heavy load applications
- design B-U with large U washer for use with wood constructions and oblong holes
- design S-KA, B-U made of galvanized steel
- design S-KAH made of stainless steel A4 for outdoor use and use in moist rooms

Installation

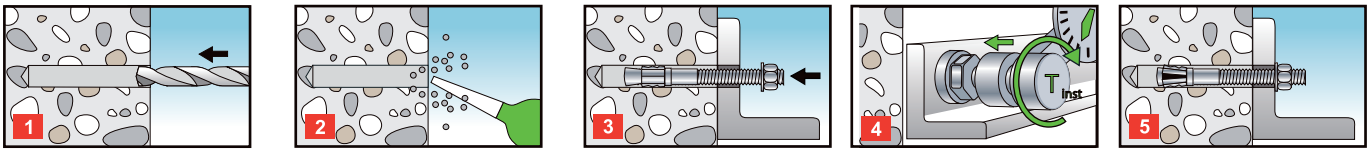

ETA-08/0173 - ETAG 001 Option 1 — for S-KA, S-KAH

ETA-01/0013 - ETAG 001 Option 7 — for B-U

Fire resistance classification F 120 as shown ETAG 020

Stud anchor - S-KA, S-KAH, B-U

Technical Data

ETA-08/0173 - ETAG 001 Option 1

S-KA - made of galvanized steel

type	ref-no.	d_0 Ø plug size [mm]	L leng. of plug [mm]	h_1 min. drilling depth [mm]	h_{ef} anchoring depth [mm]	h_{nom} anchorage depth [mm]	t_{fix} max. fixing-strength [mm]	Mxf/l_{th} thread x length [mm]	SW opening of spanner [mm]	Sxd$_2$ thickness plate [mm]	qty. per box [pcs.]
S-KA 6x 40/ 2 [1]	**36801**	6	40	35	25	30	2	6 x 18	10	1,6 x 12	150
S-KA 6 x 65/ 15 [1]	**36802**	6	65	50	35	40	15	6 x 28	10	1,6 x 12	100
S-KA 6 x 100/ 50 [1]	**36803**	6	100	50	35	40	50	6 x 28	10	1,6 x 12	100
S-KA 8 x 52/ 2 [1]	**36804**	8	52	45	30	40	2	8 x 23	13	1,6 x 16	100
S-KA 8 x 72/ 10	**36805**	8	72	60	45	50	10	8 x 32	13	1,6 x 16	50
S-KA 8 x 92/ 30	**36806**	8	92	60	45	50	30	8 x 52	13	1,6 x 16	50
S-KA 8 x 112/ 50	**36807**	8	112	60	45	50	50	8 x 72	13	1,6 x 16	40
S-KA 8 x 147/ 85	**36808**	8	147	60	45	50	85	8 x 107	13	1,6 x 16	40
S-KA 10 x 62/ 3 [1]	**36809**	10	62	50	30	40	3	10 x 26	17	2,0 x 20	50
S-KA 10 x 92/ 10	**36810**	10	92	75	60	68	10	10 x 47	17	2,0 x 20	40
S-KA 10 x 102/ 20	**37377**	10	102	75	60	68	20	10 x 57	17	2,0 x 20	25
S-KA 10 x 112/ 30	**36811**	10	112	75	60	68	30	10 x 67	17	2,0 x 20	25
S-KA 10 x 132/ 50	**36812**	10	132	75	60	68	50	10 x 87	17	2,0 x 20	25
S-KA 10 x 162/ 80	**36813**	10	162	75	60	68	80	10 x 115	17	2,0 x 20	25
S-KA 12 x 103/ 5	**36814**	12	103	90	70	81	5	12 x 53	19	2,5 x 24	20
S-KA 12 x 118/ 20	**36815**	12	118	90	70	81	20	12 x 68	19	2,5 x 24	20
S-KA 12 x 128/ 30	**36816**	12	128	90	70	81	30	12 x 78	19	2,5 x 24	20
S-KA 12 x 148/ 50	**37378**	12	148	90	70	81	50	12 x 98	19	2,5 x 24	20
S-KA 12 x 163/ 65	**36817**	12	163	90	70	81	65	12 x 113	19	2,5 x 24	20
S-KA 12 x 178/ 80	**36818**	12	178	90	70	81	80	12 x 115	19	2,5 x 24	20
S-KA 16 x 90/ 3 [1]	**36819**	16	90	80	60	70	3	16 x 43	24	3,0 x 30	10
S-KA 16 x 123/ 5	**36820**	16	123	110	85	96	5	16 x 65	24	3,0 x 30	10
S-KA 16 x 138/ 20	**36821**	16	138	110	85	96	20	16 x 80	24	3,0 x 30	10
S-KA 16 x 168/ 50	**36822**	16	168	110	85	96	50	16 x 110	24	3,0 x 30	10
S-KA 16 x 178/ 60	**36823**	16	178	110	85	96	60	16 x 115	24	3,0 x 30	10
S-KA 16 x 213/ 95	**36824**	16	213	110	85	96	95	16 x 55	24	3,0 x 30	5
S-KA 20 x 170/ 20	**36825**	20	170	130	110	120	20	20 x 55	30	3,0 x 37	5
S-KA 20 x 220/ 70	**36826**	20	220	130	110	120	70	20 x 55	30	3,0 x 37	5
S-KA 20 x 280/130	**36827**	20	280	130	110	120	130	20 x 55	30	3,0 x 37	5

Technical Data

ETA-08/0173 - ETAG 001 Option 1

S-KAH A4 - made of stainless steel, A4

type	ref-no.	d_0 Ø plug size [mm]	L leng. of plug [mm]	h_1 min. drilling depth [mm]	h_{ef} anchoring depth [mm]	h_{nom} anchorage depth [mm]	t_{fix} max. fixing-strength [mm]	Mxf/l_{th} thread x length [mm]	SW opening of spanner [mm]	Sxd$_2$ thickness plate [mm]	qty. per box [pcs.]
S-KAH 6 x 40/ 2 [1]	**36841**	6	40	35	25	30	2	6 x 18	10	1,6 x 12	150
S-KAH 6 x 65/ 15 [1]	**36842**	6	65	50	35	40	15	6 x 28	10	1,6 x 12	100
S-KAH 8 x 52/ 2 [1]	**36843**	8	52	45	30	40	2	8 x 23	13	1,6 x 16	100
S-KAH 8 x 72/ 10	**36844**	8	72	60	45	50	10	8 x 32	13	1,6 x 16	50
S-KAH 8 x 92/ 30	**36845**	8	92	60	45	50	30	8 x 52	13	1,6 x 16	50
S-KAH 8 x 112/ 50	**36846**	8	112	60	45	50	50	8 x 72	13	1,6 x 16	40
S-KAH 10 x 62/ 3 [1]	**36847**	10	62	50	30	40	3	10 x 26	17	2,0 x 20	50
S-KAH 10 x 92/ 10	**36848**	10	92	75	60	68	10	10 x 47	17	2,0 x 20	50
S-KAH 10 x 102/ 20	**37765**	10	102	75	60	68	20	10 x 57	17	2,0x20	25
S-KAH 10 x 112/ 30	**36849**	10	112	70	60	68	30	10 x 67	17	2,0 x 20	25
S-KAH 10 x 132/ 50	**36850**	10	132	75	60	68	50	10 x 87	17	2,0 x 20	25
S-KAH 12 x 103/ 5	**36851**	12	103	90	70	81	5	12 x 53	19	2,5 x 24	20
S-KAH 12 x 118/ 20	**36852**	12	118	90	70	81	20	12 x 68	19	2,5 x 24	20
S-KAH 12 x 128/ 30	**36853**	12	128	90	70	81	30	12 x 78	19	2,5 x 24	20
S-KAH 12 x 163/ 65	**36854**	12	163	90	70	81	65	12 x 113	19	2,5 x 24	20
S-KAH 16 x 123/ 5	**36855**	16	123	110	85	96	5	16 x 61	24	3,0 x 30	10
S-KAH 16 x 138/ 20	**36856**	16	138	110	85	96	20	16 x 80	24	3,0 x 30	10
S-KAH 16 x 168/ 50	**36857**	16	168	110	85	96	50	16 x 110	24	3,0 x 30	10
S-KAH 20 x 170/ 20	**36859**	20	170	130	110	120	20	20 x 55	30	3,0 x 37	5
S-KAH 20 x 220/ 70	**36860**	20	220	130	110	120	70	20 x 55	30	3,0 x 37	5

ETA-01/0013 - ETAG 001 Option 7

B-U - KEW B-U - made of galvanized steel

type	ref.-no.	d_0 Ø Plug Ø Bit [mm]	l leng. of plug [mm]	h_1 min. drilling depth [mm]	h_{ef} anchhoring depth [mm]	t_{fix} max. fixing-strength [mm]	Mxf/l_{th} thread x length [mm]	SW opening of spanner [mm]	S washer [mm]	qty. per box [pcs.]
B-U 12 - 85/180	**36901**	12	180	90/70 [2]	65/48 [2]	85/102 [2]	12 x 80	19	44	25
B-U 12 - 105/200	**36902**	12	200	90/70 [2]	65/48 [2]	105/122 [2]	12 x 80	19	44	25
B-U 12 - 145/240	**36904**	12	240	90/70 [2]	65/48 [2]	145/162 [2]	12 x 80	19	44	25
B-U 12 - 160/255	**36905**	12	255	90/70 [2]	65/48 [2]	160/177 [2]	12 x 80	19	44	20
B-U 12 - 190/285	**36906**	12	285	90/70 [2]	65/48 [2]	190/207 [2]	12 x 80	19	44	20
B-U 12 - 230/325	**36907**	12	325	90/70 [2]	65/48 [2]	230/247 [2]	12 x 80	19	44	20
B-U 12 - 260/355	**36908**	12	355	90/70 [2]	65/48 [2]	260/277 [2]	12 x 80	19	44	10
B-U 16 - 80/200	**36909**	16	200	110/90 [2]	82/64 [2]	85/103 [2]	16 x 80	24	56	10
B-U 16 - 100/220	**36910**	16	220	110/90 [2]	82/64 [2]	100/118 [2]	16 x 80	24	56	10
B-U 16 - 130/250	**36911**	16	250	110/90 [2]	82/64 [2]	130/148 [2]	16 x 80	24	56	10
B-U 16 - 165/285	**36912**	16	285	110/90 [2]	82/64 [2]	165/183 [2]	16 x 80	24	56	10
B-U 16 - 200/320	**36913**	16	320	110/90 [2]	82/64 [2]	200/218 [2]	16 x 80	24	56	10

[1] not part of the approval, recommended values

[2] drilling depth, max. fixing strength for reduced anchoring depth (note reduced loads)

Stud anchor - S-KA, S-KAH, B-U

Fire resistance classification F 120 as shown ETAG 020

ETA-08/0173 - ETAG 001 Option 1 — for S-KA, S-KAH

ETA-01/0013 - ETAG 001 Option 7 — for B-U

Permissible loads[2)]

Please consider the entire approval documents S-KA / S-KAH - ETA-08/0173

anchor type			S-KA 6 x 40[1)]	S-KA 6[1)]	S-KA 8 x 50[1)]	S-KA 8	S-KA 10x60[1)]	S-KA 10	S-KA 12	S-KA 16x90[1)]	S-KA 16	S-KA 20[1)]
effective anchorage depth	h_{ef}	[mm]	25	35	30	45	30	60	70	60	85	110
anchorage depth	h_{nom}	[mm]	30	40	40	50	40	68	81	70	96	120
allowable centrical tension load[2)] of a single anchor without edge impact N_{zul}, e.g. edge distance $c \geq 1{,}5h_{ef}$ and centre distance $s \geq 3_{hef}$												
cracked concrete C20/25[3)]		[kN]	-	-	-	2,0	-	3,6	4,8	-	9,5	-
non-cracked concrete C20/25[3)]		[kN]	1,4	1,8	1,9	3,6	2,2	6,3	7,9	9,9	16,7	13,9
allowable radial load[2)] of a single anchor without edge impact, V_{zul}, e.g. edge distance $c \geq 10h_{ef}$ and centre distance $s \geq 3h_{ef}$												
cracked and non-cracked C20/25 - C50/60	V_{zul}	[kN]	1,4[4)]	1,8[4)]	3,3[4)]	4,8	3,3[4)]	8,7	11,0	11,2[4)]	21,0	13,9[4)]
characteristic bending moment	M_{zul}	[Nm]	4,1	4,1	10,0	10,0	22,9	22,9	34,3	88,6	88,6	173,0
component dimensions and assembly characteristic values												
characteristic centre distance	$s_{cr,N}$	[mm]	120	120	160	135	200	180	210	320	255	400
characteristic edge distance	$c_{cr,N}$	[mm]	90	90	120	68	180	90	105	240	128	300
min. centre distance	s_{min} =	[mm]	-	-	-	50	-	55	60	-	70	-
	für c ≥		-	-	-	50	-	80	90	-	120	-
min. edge distance	c_{min} =	[mm]	-	-	-	50	-	50	55	-	85	-
	für s ≥		-	-	-	50	-	100	145	-	150	-
min. component thickness	h_{min} =	[mm]	50	60	60	100	65	120	140	110	170	180
drill nominal diameter	d_0 / d_b =	[mm]	6	6	8	8	10	10	12	16	16	20
drill hole depth	LB / h_0/h_f/t ≥	[mm]	35	50	45	60	50	75	90	80	110	130
clearance hole in the component to be attached	d_f ≤	[mm]	7	7	9	9	12	12	14	18	18	22
max. torque	T_{inst} =	[Nm]	7	7	18	20	30	35	50	100	120	240

[1)] not part of the approval, recommended values
[2)] Partial safety factors γ_M and γ_F from 1,4 are considered.
[3)] The concrete is considered to be normally reinforced or unreinforced.
[4)] only for non-cracked concrete

Permissible loads[2)]

Please consider the entire approval documents S-KA / S-KAH - ETA-08/0173

anchor type			S-KAH 6x40[1)]	S-KAH 6[1)]	S-KAH 8x50[1)]	S-KAH 8	S-KAH 10x60[1)]	S-KAH 10	S-KAH 12	S-KAH 16	S-KAH 20[1)]
effective anchorage depth	h_{ef}	[mm]	25	35	30	45	30	60	70	85	110
anchorage depth	h_{nom}	[mm]	30	40	40	50	40	68	81	96	120
allowable centrical tension load[2)] of a single anchor without edge impact N_{zul}, e.g. edge distance $c \geq 1{,}5h_{ef}$ and centre distance $s \geq 3_{hef}$											
cracked concrete C20/25[3)]		[kN]	-	-	-	2,0	-	3,6	4,8	9,5	-
non-cracked concrete C20/25[3)]		[kN]	1,4	1,8	1,9	3,6	2,2	6,3	7,9	16,7	13,9
allowable radial load[2)] of a single anchor without edge impact, V_{zul}, e.g. edge distance $c \geq 10h_{ef}$ and centre distance $s \geq 3h_{ef}$											
cracked and non-cracked C20/25 - C50/60	V_{zul}	[kN]	1,4[4)]	1,8[4)]	3,3[4)]	5,2	3,3[3)]	8,1	11,9	22,4	13,9[4)]
characteristic bending moment	M_{zul}	[Nm]	4,4	4,4	10,5	10,5	21,4	21,4	37,6	95,2	173,0
component dimensions and assembly characteristic values											
characteristic centre distance	$s_{cr,N}$	[mm]	120	120	160	135	200	180	210	255	400
characteristic edge distance	$c_{cr,N}$	[mm]	90	90	120	68	180	90	105	128	300
min. centre distance	s_{min} =	[mm]	-	-	-	50	-	55	60	70	-
min. edge distance	für c ≥		-	-	-	50	-	80	90	120	-
min. component thickness	c_{min} =	[mm]	-	-	-	50	-	50	55	85	-
drill nominal diameter	für s ≥		-	-	-	50	-	100	145	150	-
drill hole depth	h_{min} =	[mm]	45	60	60	100	60	100	120	160	180
clearance hole in the component to be attached	d_0 / d_b =	[mm]	6	6	8	8	10	10	12	16	20
max. torque	LB / h_0/h_f/t ≥	[mm]	35	50	45	65	50	70	80	105	130
Durchgangsloch im anzuschließenden Bauteil	d_f ≤	[mm]	7	7	9	9	12	12	14	18	22
Maximales Drehmoment	T_{inst} =	[Nm]	7	7	18	20	30	35	54	120	240

[1)] not part of the approval, recommended values
[2)] Partial safety factors γ_M and γ_F from 1,4 are considered.
[3)] The concrete is considered to be normally reinforced or unreinforced.
[4)] only for non-cracked concrete

Permissible loads,

Please consider the entire approval documents B-U - ETA-01/0013

Plugtyp			B-U 12	B-U 16
effective anchoring depth	h_{ef} =	[mm]	65	82
permissible centrical tensile load of single plug without edge impact N_{zul}, i.e. edge distance c ≥ 1.5 h_{ef} and centre-to-centre distance s ≥ 3h_{ef}				
uncracked concrete C20/25		[kN]	11,9	-
uncracked concrete C25/35		[kN]	13,1	16,7
uncracked concrete C30/37		[kN]	14,5	18,3
uncracked concrete C40/50		[kN]	16,8	20,3
uncracked concrete C50/60		[kN]	18,5	23,5
				25,8
permissible transverse force of single plug without edge impact V_{zul}, i.e. edge distance c ≥ 10h_{ef} and centre-to-centre distance s ≥ 3h_{ef}				
uncracked concrete C20/25		[kN]	14,3	23,6
uncracked concrete C25/35		[kN]	14,3	23,6
permissible bending torque M_{zul}		[Nm]	44,6	99,9
Centre-to-centre and edge distances, structural component dimensions and installation characteristics				
characteristic centre-to-centre distance	s_{cr} =	[mm]	195	246
characteristic edge distance	c_{cr} =	[mm]	97,5	123
minimum centre-to-centre distance	s_{min} =	[mm]	75	90
minimum edge distance minimum	c_{min} =	[mm]	90	105
thickness of structural component	h_{min} =	[mm]	130	170
nominal diameter of drill	d_0 =	[mm]	12	16
depth of drilled hole	h_1 ≥	[mm]	90/70[1)]	110/90[1)]
hole in component to be connected	d_f ≤	[mm]	14	18
maximum torque	T_{inst} =	[Nm]	50	100
opening of spanner		[mm]	19	24
Centre-to-centre and edge distances at reduced anchoring depth[2)]				
effective anchoring depth	h_{ef} =	[mm]	48	64
load reduction factor			0,6	0,7
characteristic centre-to-centre distance	$s_{min,N}$ =	[mm]	144	192
characteristic edge distance	$c_{min,N}$ =	[mm]	72	96
minimum centre-to-centre distance	s_{min} =	[mm]	90	105
minimum edge distancel	c_{min} =	[mm]	105	125
minimum thickness of structural component	h_{min} =	[mm]	100	130

[1)] depth of drilled hole for reduced anchoring depth (note reduced loads)
[2)] not included in approval, recommended values

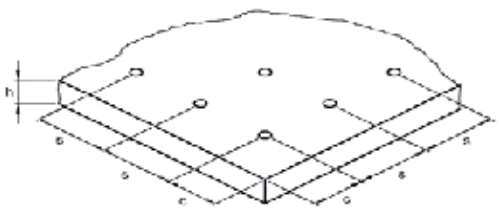

Notes

Chemical Fixings

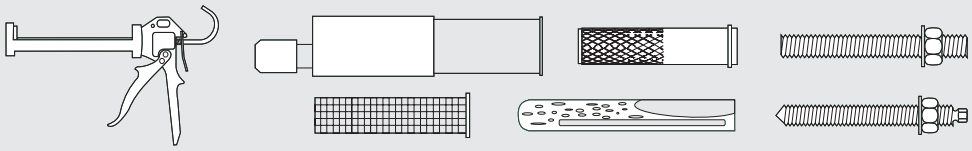

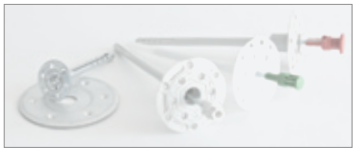

Injection Resin - VM V

ETA-08/0089 - ETAG 001-05 Option7

1 VM V 280 S - Injection Resin 280 ml
2 VM V 345 S - Injection Resin 345 ml
3 static mixer - VSM

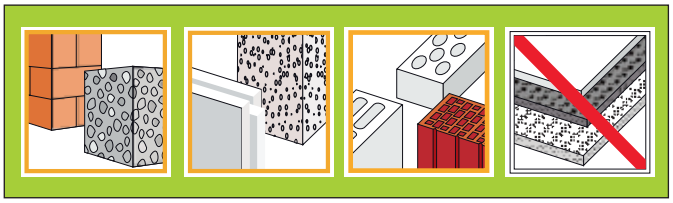

Characteristics

- universal, applicable for almost all building materials and a broad field of application.
- powerful 2-component resin-based mortar for high loads on vinyl ester basis
- for expansion pressure- and tension free anchorage
- for processing with thread rods or reinforcing steel
- styrene-free, therefore odourless and user-friendly processing
- opened cartridge can be used again with new static mixer
- 280ml cartridge can be processed with silicon dispenser guns customary in trade

notices

- Do not use the first strokes.
- Only insert mortar into the bore hole when it is dyed evenly.
- After usage, the cartridge can be relocked and stored and can be used again with a new mixer.

Technical data

VM V 280 S

VM V 345 S

ETA-08/0089 - ETAG 001-05 Option7

type	ref.-no.	contents	applicator gun	pcs./UK
VM V 280 S	**37234**	1 cartridge 280 ml + 2 static mixer	VPK 1 / VPK 2	12
VM V 345 S	**37235**	1 cartridge 345 ml + 2 static mixer	VPK 3	12

KEW VSM - Static mixer

type	ref.-no.	contents	qty. per box / pcs.
VSM	**33806**	10 static mixer	10

processing- and curing times für KEW VM V

cartridge temperature	processing time [min]	temperature in anchorage	curing time [min]
5 °C	20	5 °C	360
10 °C	15	10 °C	270
20 °C	7	20 °C	180
30 °C	4	30 °C	90
35 °C	2	35 °C	60

Suitability

without perforated sleeve:
solid base materials such as concrete, light concrete, solid brick. solid sand lime stone
with performated sleeve:
vertical perforated brick, hollow sand lime stone, hollow brick, hollow ceilings

For fixing of:
steel constructions, balustrades, consoles, ladders, cable trays, machines, stairs, gates, facades, window elements, spaced sub-constructions

Installation

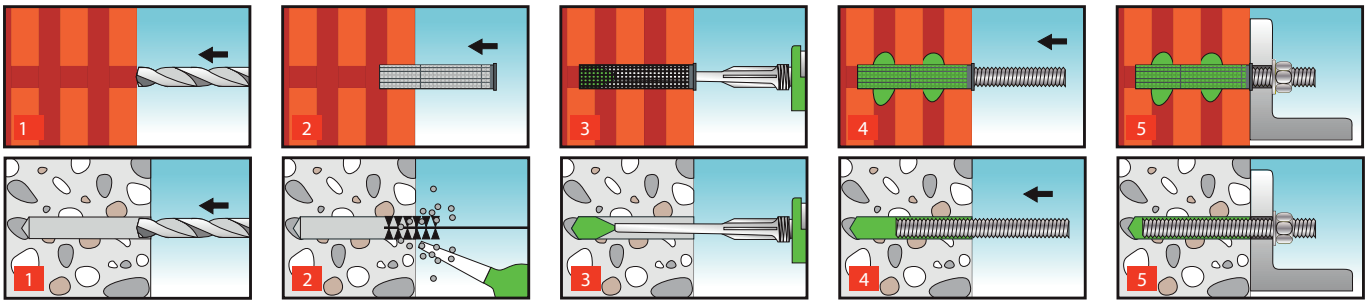

composite mortar accessories and technical data for concrete

accessories for processing in concrete

ETA-08/0089 - ETAG 001-05 Option7

KEW VG - Threaded stud, steel, zinc plated
Suitability: in connection with composite mortar VM V

type	ref.-no.	t_{fix} max. fixing strength without VSH [mm]	t_{fix} max. fixing strength with VSH [mm]	suitable for	qty. per box pcs.
VG M 8 x 110	**36690**	80		20	10
VG M 8 x 130	**36691**	80		40	10
VG M 10 x 110	**36692**	90		5	10
VG M 10 x 130	**36693**	90		25	10
VG M 10 x 150	**36694**	90		45	10
VG M 12 x 140	**36695**	110		15	10
VG M 12 x 160	**36696**	110		35	10
VG M 12 x 180	**36697**	110		55	10
VG M 16 x 175	**37176**	125		30	10
VG M 16 x 200	**37177**	125		55	10

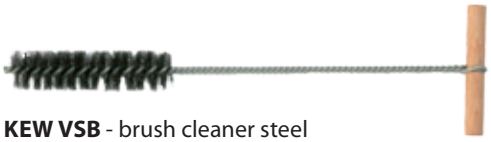

KEW VSB - brush cleaner steel
Suitability: cleaning of bore holes in concrete

type	ref.-no.	for drill hole [mm]	for threaded stud	sales unit
VSB 8	**37338**	8	VG M 6	1
VSB 10	**37339**	10	VG M 8	1
VSB 12	**37340**	12	VG M 10	1
VSB 14	**37341**	14	VG M 12	1
VSB 18	**37342**	18	VG M 16	1
VSB 24	**37343**	24	VG M 20	1

Chemical Fixings

technical data for processing of composite mortar VM V in concrete

data are based on processing with thread rods steel stability 5.8.
Please consider entire approval ETA-08/0089 for measurement.
the recommended loads of our composite mortar VM EP and VM P are ca. 10% below the stated values.

ETA-08/0089 - ETAG 001-05 Option7

anchor type			VG M 6 [1]	VG M 8 [1]	VG M 10	VG M 12	VG M 16	VG M 20 [1]
effective anchorage depth	h_{ef}	[mm]	60	80	90	110	125	170
allowable centrical tension load[2]) of a single anchor without edge impact in non-cracked concrete C20/25[3]), e.g. edge distance $c \geq c_{cr,N}$ and centre distance $s \geq s_{cr,N}$								
non-cracked concrete	C20/25	[kN]	5,0	8,8	14,3	19,0	28,6	41,7
allowable radial load[2]) of a single anchor without edge in non-cracked concrete C20/25[3]), d.h. c^3ccr,N and centre distance s^3scr,N								
non-cracked concrete	C20/25	[kN]	2,6	4,6	7,1	10,0	18,6	30,9
characteristic centre distance	$s_{cr,N}$	[mm]	120	160	180	220	250	340
characteristic edge distance	$c_{cr,N}$	[mm]	60	80	90	110	125	170
min. centre distance[4])	s_{min}	[mm]	60	80	90	110	125	170
min. edge distance[4])	c_{min}	[mm]	60	80	90	110	125	170
min. component thickness	h_{min}	[mm]	100	110	130	160	160	220
drill nominal diameter	d_0	[mm]	8	10	12	14	18	24
drill hole depth	h_0	[mm]	60	80	90	110	125	170
clearance hole in the component to be attached	d_f	[mm]	7	9	12	14	18	22
max. torque in fixed	T_{inst}	[Nm]	5	10	20	40	80	120
mortar fill quantity (ca.)		[ml]	4 - 5	8 - 10	10 - 12	12 - 14	18 - 20	45

[1]) not part of the approval

technical data for processing of composite mortar VM V and reinforcing steel BST 500 S

in concrete[1]
The recommended loads of our composite mortar VM EP and VM P are ca. 10% below the stated values.

anchor type			Ø8	Ø10	Ø12	Ø14	Ø16	Ø20
drill nominal diameter	d_0	[mm]	10	12	16	18	20	25
effective anchorage depth	h_{ef1}	[mm]	80	100	120	140	160	200
effective anchorage depth	h_{ef2}	[mm]	329	429	463	560	659	823
recommended centrical tension load of a single anchor without edge impact in non-cracked concrete C20/25, i. e.- edge distance $c \geq 5d_s$								
non-cracked concrete for h_{ef1}	C20 / 25	[kN]	5,3	7,9	12,7	16,7	21,2	33,1
non-cracked concrete for h_{ef2}	C20 / 25	[kN]	21,8	34,1	49,1	66,9	87,4	136,5

[1]) not part of the approval

Injection Resin - VM EP

1 VM EP 160 S - Injection Resin 160 ml
2 VM EP 280 S - Injection Resin 280 ml
3 static mixer - VSM

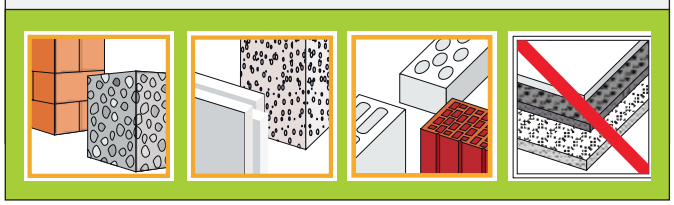

Characteristics

- universal, applicable for almost all building materials
- powerful 2-component resin-based mortar for high loads on epoxy acrylate basis
- due to static mixer, separate mixing process is omitted
- for expansion pressure- and tension free anchorage
- environmental-friendly styrene-free and without solvents
- also for wet bore holes, diamond bore holes and bore holes, which are too big
- opened cartridge can be used again with new static mixer

notices

- Do not use the first strokes.
- Only insert mortar into the bore hole when it is dyed evenly.
- After usage, the cartridge can be relocked and stored and can be used again with a new mixer.

VM EP 160 S

VM EP 280 S

type	ref.-no.	content	applicator gun	qty. per box pcs.
VM EP 160 S	**36637**	1 cartridge 160 ml + 2 static mixer	VPK 1 / VPK 2	12
VM EP 280 S	**36638**	1 cartridge 280 ml + 2 static mixer	VPK 1 / VPK 2	12

VSM - Static mixer

type	ref.-no.	content	qty. per box pcs.
VSM	**33806**	10 static mixer	10

Suitability

without perforated sleeve:
solid base materials such as concrete, light concrete, solid brick. solid sand lime stone
with performated sleeve:
vertical perforated brick, hollow sand lime stone, hollow brick, hollow ceilings

For fixing of:
steel constructions, balustrades, consoles, ladders, cable trays, machines, stairs, gates, facades, window elements, spaced sub-constructions

processing- and curing times für VM EP

cartridge temperature	processing time [min]	temperature in anchorage	curing time [min]
5 °C	25	5 °C	120
10 °C	15	10 °C	90
20 °C	8	20 °C	45
30 °C	4	30 °C	20
35 °C	2	35 °C	15

Installation

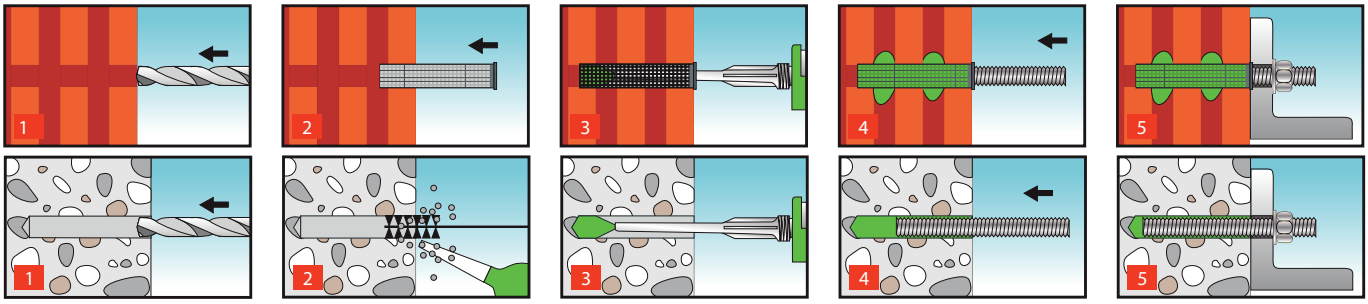

Injection Resin - VM P

1 VM P 150 S - Injection Resin 150 ml
2 VM P 280 S - Injection Resin 280 ml
3 VM P 380 S - Injection Resin 380 ml
4 static mixer - VSM

Suitability

without perforated sleeve:
solid base materials such as concrete, light concrete, solid brick. solid sand lime stone
with performated sleeve:
vertical perforated brick, hollow sand lime stone, hollow brick, hollow ceilings

For fixing of:
steel constructions, balustrades, consoles, ladders, cable trays, machines, stairs, gates, facades, window elements, spaced sub-constructions

Characteristics

- universal, expansion pressure free anchorage system for almost all building materials and a broad field of application
- powerful 2-component resin-based mortar on polyester basis
- tension-free anchorage
- for processing with thread rods or reinforcing steel
- styrene-free, therefore odour-free and user-friendly application
- opened cartridge can be used again with new static mixer
- 150ml and 280ml can be used with silicone dispenser guns customary in trade

notices

- Do not use the first strokes.
- Only insert mortar into the bore hole when it is dyed evenly.
- After usage, the cartridge can be relocked and stored and can be used again with a new mixer.

Technical data

VM P 150 S

VM P 280 S

VM P 380 S

type	ref.-no.	content	applicator gun	amount pcs./UK
VM P 150 S	**33780**	1 cartridge 150 ml + 2 static mixer	VPK 1 / VPK 2	12
VM P 280 S	**37237**	1 cartridge 280 ml + 2 static mixer	VPK 1 / VPK 2	12
VM P 380 S	**37238**	1 cartridge 380 ml + 2 static mixer	VPK 4	12

KEW VSM - Static mixer

type	ref.-no.	content	qty. per box pcs.
VSM	33806	10 static mixer	10

processing- and curing times für VM P

cartridge temperature in °C	processing time [min]	temperature in anchorage °C	curing time [min]
5	15	5	120
10	12	10	90
20	6	20	45
30	3	30	20
35	2	35	15

Installation

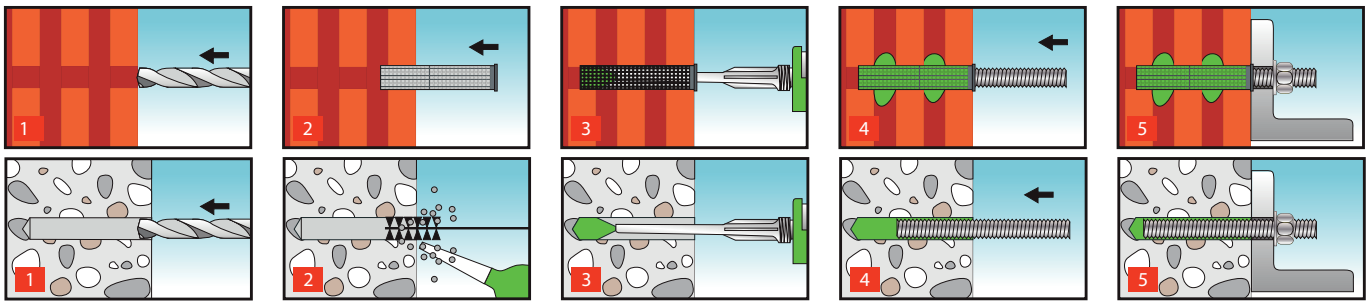

composite mortar accessories for masonry

accessories for processing in masonry

VSH - Perforated sleeves
Suitability: threaded stud KEW VG or threaded sleeve VIG in perforated bricks and hollow blocks

type	ref.-no.	ØH Ø sleeve= Øbit [mm]	LH length of sleeve [mm]	LB min. drill depth [mm]	ØS Ø dia. fixing element	mortar volume required approx. [ml]	outer carton pcs.
VSH 12 x 50	**33804**	12	50	60	M 6 - M 8	7	50
VSH 15 x 85	**33805**	15	85	95	M 8 - M 12	17,5	20

VIG - Threaded sleeve
Suitability: with perforated sleeve KEW VSH in perforated bricks and hollow blocks, without perforated sleeve in solid material

type	ref.-no.	H Ø bit [mm]	HV	screw-in depth		internal thread	suitable for	qty. per box pcs.
VIG M 8	**36669**	14	90	12	45	M 8	VSH 15 x 85	20
VIG M 10	**36478**	16	90	15	45	M 10	-	20
VIG M 12	**36670**	18	100	18	50	M 12	-	20

VKB - Cleaning brush plastic
Suitability: cleaning of drill holes in masonry

type	ref.-no.	for drill hole [mm]	for threaded stud	sales unit
VKB 8	**36676**	8 - 16	M 8 - M 12	1
VKB 16	**36677**	ab 16	ab M 16	1

VG - Threaded stud, steel, zinc plated
Suitability: with perforated sleeve KEW VSH in perforated bricks and hollow blocks, without perforated sleeve in solid material

type	ref.-no.	t_{fix} max. fixing strength without VSH [mm]	t_{fix} max. fixing strength with VSH [mm]	suitable for	qty. per box pcs.
VG M 8 x 110	**36690**	20	50	VSH 12 x 50	10
VG M 8 x 130	**36691**	40	70	VSH 12 x 50	10
VG M 10 x 110	**36692**	5	10	VSH 15 x 85	10
VG M 10 x 130	**36693**	25	30	VSH 15 x 85	10
VG M 10 x 150	**36694**	45	50	VSH 15 x 85	10
VG M 12 x 140	**36695**	15	40	VSH 15 x 85	10
VG M 12 x 160	**36696**	35	60	VSH 15 x 85	10
VG M 12 x 180	**36697**	55	80	VSH 15 x 85	10
VG M 16 x 175	**37176**	30	-	-	10
VG M 16 x 200	**37177**	55	-	-	10

Technical Data

KEW VKP 1 - Dispenser gun for D.I.Y. experts
Suitability: 150 ml, 160 ml, 280 ml cartridge

type	ref.-no.	designation	sales unit
VKP 1	**36679**	Dispenser gun VKP 1	1

KEW VKP 2 - Dispenser gun for professionals
Suitability: 150 ml, 160 ml, 280 ml cartridge

Type	ref.-no.	designation	sales unit
VKP 2	**36680**	Dispenser gun VKP 2	1

KEW VKP 3 - Dispenser gun
Suitability: 345 ml cartridge

Type	ref.-no.	designation	sales unit
VKP 3	**36681**	Dispenser gun VKP 3	1

KEW VKP 4 - Dispenser gun
Suitability: 380 ml cartridge

type	ref.-no.	designation	sales unit
VKP 4	**37337**	Dispenser gun VKP 4	1

KEW VKA - airpump
Suitability: cleaning of drill holes

type	ref.-no.	application	sales unit
VKA	**36678**	for all drill holes	1

technical data for masonry

technical data for processing of composite mortar VM V in masonry

data are based on processing with thread rods steel stability 5.8.
the recommended loads of our composite mortar VM EP and VM P are identical with the values displayed below.

anchor type			thread rods						internal thread anchor		
size			VG M 6	VG M 8		VG M 10	VG M 12	VG M 16	VIG M 8	VIG M 10	VIG M 12
application with perforated sleeve KEW VSH			VSH 12 x 50	VSH 12 x 50	VSH 15 x 85	VSH 15 x 85	VSH 15 x 85		VSH 15 x 85		
recommended loads											
vertical coring brick	HLz 6	[kN]	0,4 (0,8)[1]	0,4 (0,8)[1]	0,4 (0,8)[1]	0,4 (0,8)[1]	0,4 (0,8)[1]	-	0,4 (0,8)[1]	-	-
hollow sand-lime brick	KSL 6	[kN]	0,4 (0,8)[1]	0,4 (0,8)[1]	0,4 (0,8)[1]	0,4 (0,8)[1]	0,4 (0,8)[1]	-	0,4 (0,8)[1]	-	-
hollow blocks made of concrete	Hbl 4	[kN]	0,6 (0,8)[1]	0,6 (0,8)[1]	0,6 (0,8)[1]	0,6 (0,8)[1]	0,6 (0,8)[1]	-	0,6 (0,8)[1]	-	-
solid brick	Mz 12	[kN]	1,0	1,0	1,7	1,7	1,7	-	1,7	-	-
solid sand-lime brick	KS 12	[kN]	1,0	1,0	1,7	1,7	1,7	-	1,7	-	-
drill nominal diameter	d_0	[mm]	12			15			15		
drill hole depth	h_0	[mm]	60			95			95		
application depth/anchorage depth of perforated sleeve	h_{ef}	[mm]	50			85			85		
mortar fill quantity		[ml]	10 - 12			20 - 25			20 - 25		
anchor type			thread rods						internal thread anchor		
size			VG M 6	VG M 8		VG M 10	VG M 12	VG M 16	VIG M 8	VIG M 10	VIG M 12
application without perforated sleeve KEW VSH											
recommended loads											
solid brick	Mz 12	[kN]	1,0	1,0		1,7	1,7	1,7	1,0	1,7	1,7
solid sand-lime brick	KS 12	[kN]	1,0	1,0		1,7	1,7	1,7	1,0	1,7	1,7
drill nominal diameter	d_0	[mm]	8	10		12	14	18	14	16	18
drill hole depth	h_0	[mm]	80	80		80	80	80	90	90	90
anchorage depth	h_{ef}	[mm]	75	75		75	75	75	85	85	85
mortar fill quantity		[ml]		6 - 8		8 - 10	10 - 12	15 - 17	10 - 12	10 - 12	10 - 12
assembly nominal values											
centre distance (anchor group)	≥s	[mm]	100								
min. distance between single fixings	s	[mm]	250								
edge distance	c	[mm]	200								
edge distance with load	c	[mm]	50								
min. component thickness	h_{min}	[mm]	110								
clearance hole in the component to be attached	d_f	[mm]	7	9		12	14	18	9	12	14
max. torque for fixing	T_{inst}	[Nm]									

[1] Values in brackets apply for drilling mode. For KSL the outward margins must be at least 30 mm.

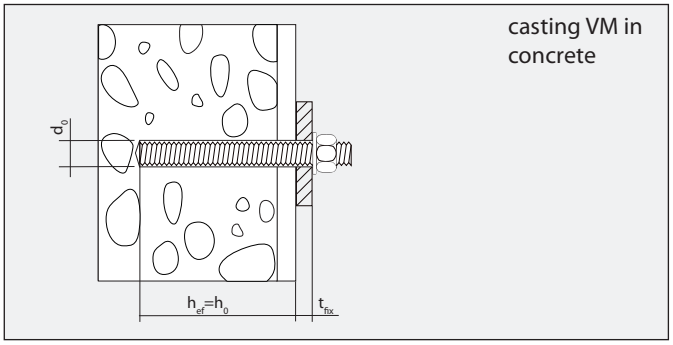

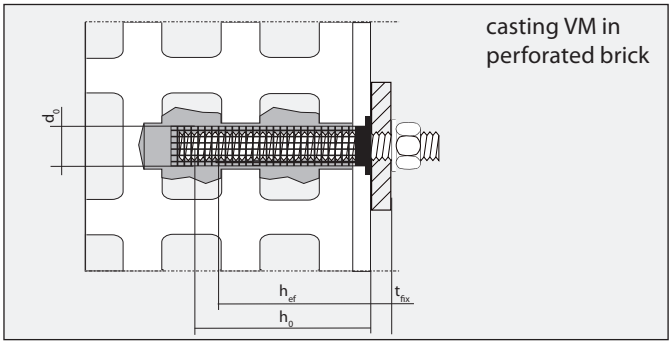

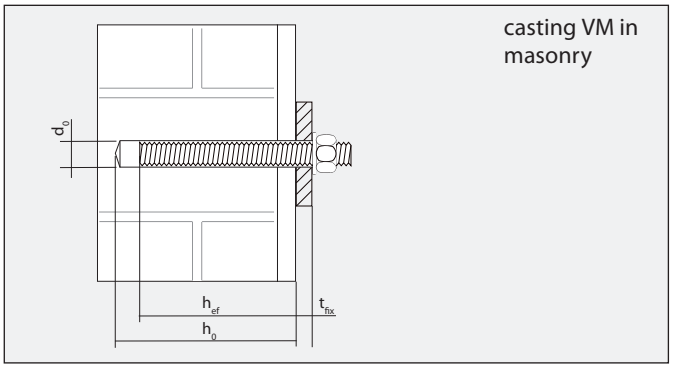

ETA-08/0231 - ETAG 001-1
Option 8

Chemical Anchor System - VAP

Chemical anchor capsule
VAP

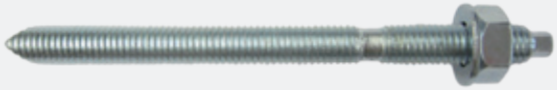

Threaded stud - VAS, steel, zinc plated

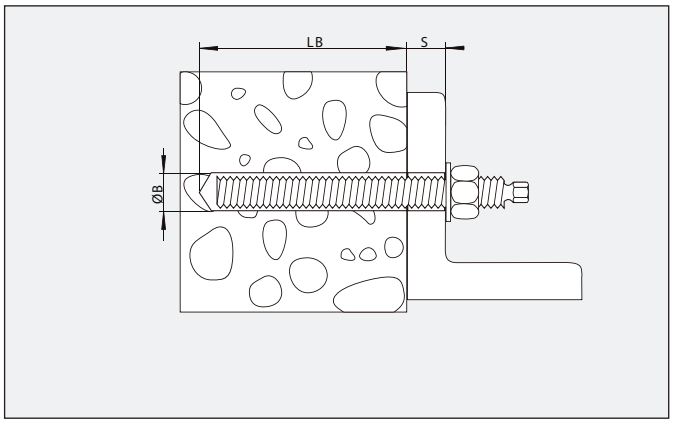

Technical Data

VAP - chemical anchor capsule

type	ref.-no.	ØB Ø drill bit [mm]	LB drill depth [mm]	qty. per box pcs.
VAP M 8	**33807**	10	80	10
VAP M10	**33808**	12	90	10
VAP M12	**33809**	14	110	10

more sizes available upon request

VAS - threaded stud, steel, zinc plated

type	ref.-no.	L total length [mm]	S max. Fixing thickness [mm]	qty. per box pcs.
VAS M 8 x 110	**33810**	110	13	10
VAS M 10 x 130	**33811**	130	20	10
VAS M 12 x 160	**33812**	160	25	10

more sizes available upon request

Suitability

Base materials:
concrete and solid natural stone

For fixing of:
steel constructions, balustrades, consoles, ladders, cable trays, machines, stairs, gates, facade constructions, window elements, stand-off constructions

Characteristics

- simple installation
- expansion- and tension-free anchorage
- efficient and economic serial installations
- suitable for dry and wet base material
- European technical approval for anchorings in uncracked concrete

Advice

The maximum load can only be achieved if:

- the drill hole is cleaned (use brush and airpump)
- the drill hole dimensions correspond to those stated by the manufacturer
- the threaded stud is installed as per the instructions, i.e. with rotation and percussion, and the curing times are being observed

processing- and curing times for VAP

temperature in anchorage	curing time [min]
-5°C - 0°C	360
0°C - 5°C	180
5°C - 10°C	90
10°C - 20°C	40
> 20 °C	20

Installation

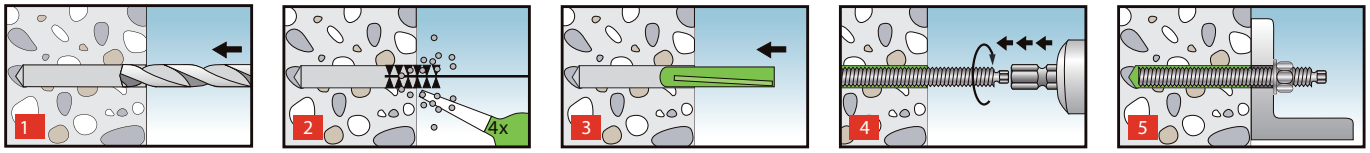

Chemical Anchor System - VAP

ETA-08/0231 - ETAG 001-1
Option 8

Characteristic values of resistance

Please consider the entire approval documents ETA-08/0231

Anchor size			M8	M10	M12	M16	M20	M24
steel ailure for anchor rods made of galvanised steel, strength class 5.8								
characteristic resistance	$N_{Rk,s}$	[kN]	17	26	38	72	114	165
partial safety factor	M_s [1)]		1,56	1,56	1,56	1,56	1,56	1,56
pullout failure in concrete C20/25 to C50/60								
characteristic resistance in non-cracked concrete[2)]	$N_{Rk,p}$	[kN]	9	12	16	25	40	60
partial safety factor in dry and wet concrete	M_c		1,8[3)]	1,8[3)]	1,8[3)]	1,8[3)]	1,8[3)]	1,8[3)]
partial safety factor on flooded holes	M_c		-	-	1,8[3)]	1,8[3)]	1,8[3)]	1,8[3)]
breakout and splitting failure								
minimum thickness of member	h_{min}	[mm]	110	120	150	160	220	300
partial safety factor in dry and wet concrete	M_c		1,8[3)]	1,8[3)]	1,8[3)]	1,8[3)]	1,8[3)]	1,8[3)]
partial safety factor on flooded holes	M_c		-	-	1,8[3)]	1,8[3)]	1,8[3)]	1,8[3)]
spacing and edge distance								
edge distance	$c_{cr,N}$	[mm]	120	135	165	190	255	315
spacing	$s_{cr,N}$	[mm]	240	270	330	380	510	630

Characteristic values of resistanceto shear load

Anchor size			M8	M10	M12	M16	M20	M24
Steel ailure without lever arm for anchor rods made of galvanised steel, strength class 5.8								
Characteristic resistance	$V_{Rk,s}$	[kN]	8	13	19	36	57	83
Characteristic bending moment	$M^0_{Rk,s}$ [1)]	[Nm]	16	30	56	144	285	498
Partial safety factor	M_s [1)]		1,30	1,30	1,30	1,30	1,30	1,30
Concrete breakout								
Concrete edge failure								
Effective length of anchor in shear loading	l_f	[mm]	80	90	110	125	170	210
Outside diameter of anchor	d_{nom}	[mm]	10	12	14	18	25	28
Partial safety factor	M_c [1)]		1,50[4)]	1,50[4)]	1,50[4)]	1,50[4)]	1,50[4)]	1,50[4)]
Installation parameters								
Depth of drill hole	h_0	[mm]	80	90	110	125	170	210
Nominal diameter of drill hole	d_0	[mm]	10	12	14	18	25	28
Cutting diameter of drill hole	d_{cut}	[mm]	10,45	12,45	14,5	18,5	25,5	28,5
Diameter of clearance hole in fixture	d_f	[mm]	9	12	14	18	22	26
Installation torque	T_{inst}	[Nm]	10	20	40	60	120	150
Minimum edge distance	c_{min}	[mm]	60	70	85	95	130	160
Minimum spacing	s_{min}	[mm]	60	70	85	95	130	160

Recommended loads per dowel for all load directions [kN]

Recommended values for concrete fc=20 N/mm² and an anchor rod machining steel property class 5.8.
For the dimensioning, the complete approval document (ETA-08/0231) must be observed.

Anchor size			M8	M10	M12	M16	M20	M24
Depth of drill hole	h_v	[mm]	80	90	110	125	170	210
Nominal diameter of drill hole		[mm]	10	12	14	18	25	28
Empfohlene Last pro Dübel		[kN]	8	13	19	36	57	83

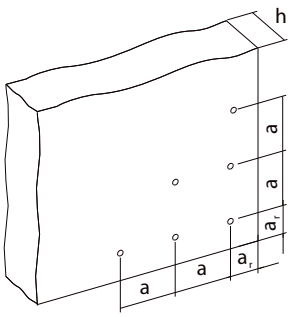

1) in absence of other national regulations
2) max. long term temperature / max. short term temperature
3) the installation safety factor ? = 1,2 is included 2
4) the installation safety factor ? = 1,0 is included

Insulation Material Fixings

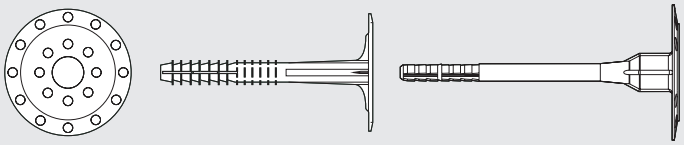

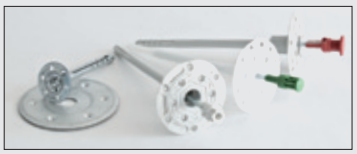

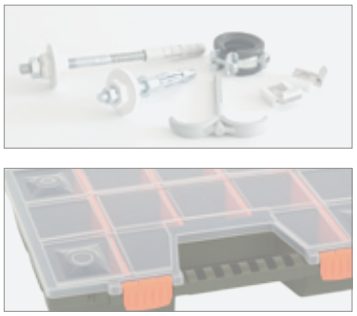

Hammer fixing – TSDL-V

B 6124 GEPRÜFT

ETA-04/0030 - ETAG 014
A - B - C - D

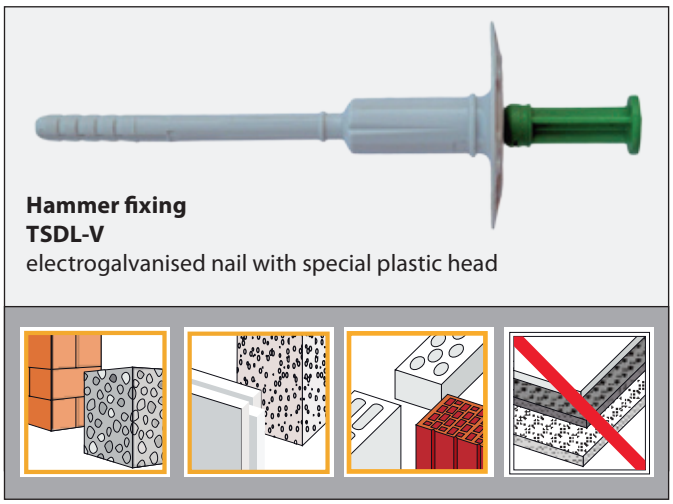

Hammer fixing
TSDL-V
electrogalvanised nail with special plastic head

Suitability

Approved for:
concrete, full bricks and perforated bricks (Utilisation category: A - B - C - D)

Also suitable for:
Natural stone with dense structure, lightweight concrete full block and hollow block, aerated concrete

Suitable for the fixation of:
different insulation materials, e.g. in external thermal insulation composite systems (WDVS)

Characteristics

- fastening system, consisting of expansion dowel with holding plate and expansion nail with special head
- special head prevents unwanted heat loss and forms an additional corrosion protection
- Holding plate with mortar-grippable surface which is also optimally adapted as carrier for plaster
- Pre-mounted fastening units reduce the mounting work
- European technical approval as multi-use fastening for the anchoring of bonded thermal insulation composite systems inspected according to ETAG 004
- meets all requirements of the usage category A, B, C and D
- according to ÖNORM B 6124 and meets all requirements for the utilisation categories A and B.
- approved in combination with the insulation disk DSB also for soft dimensionally stable insulation materials

Remarks

After the drilling process, the drill hole has to be brushed or blown out. Old plaster is no stable ground. Accordingly, a larger size of the depth of the drill hole and the dowel length is to be selected.

Innovations, Aadvantages:

- optimally formed expansion area for a better stability in materials
- extended expansion area for a secure hold in »problematic materials«
- particularly for the flush mounting of the dowel plate in the insulation material modified head area
- sealing of the special head offers optimal protection against moisture, corrosion and prevents heat loss
- optimal strength values up to a length of 300 mm
- thermal bridge optimised for a thermal transmission coefficient of 0.002 W/K

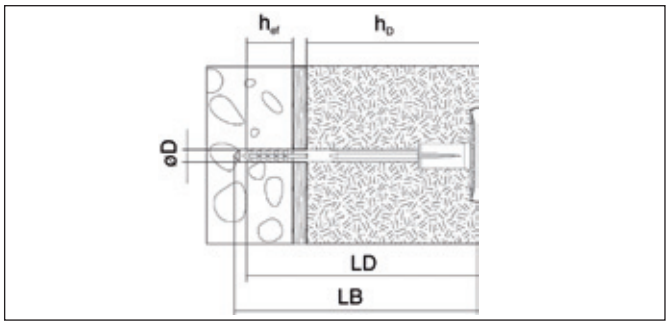

Technical data

ETA-04/0030 - ETAG 014
A - B - C - D

TSDL-V - Hammer fixing
distribution exclusively to system providers

type	ref.-no	ØD Ø anchor Ø drill in mm	colour special head	LD anchor length mm	LB min. drill-hole depth mm	h_{ef} eff. anchorage depth mm	h_D insu-lation strength new building +10mm glue mm	h_D insulation strength old building incl. glue + 20 mm existing stucco	qty. per box pcs.
TSDL-V 8 x 120	**37966**	8	yellow	120	130	30	80	60	200
TSDL-V 8 x 140	**37967**	8	green	140	150	30	100	80	200
TSDL-V 8 x 160	**37968**	8	white	160	170	30	120	100	200
TSDL-V 8 x 180	**37969**	8	orange	180	190	30	140	120	200
TSDL-V 8 x 200	**37970**	8	braun	200	210	30	160	140	200
TSDL-V 8 x 220	**37971**	8	blue	220	230	30	180	160	100
TSDL-V 8 x 240	**37972**	8	red	240	250	30	200	180	100
TSDL-V 8 x 260	**37973**	8	green	260	270	30	220	200	100
TSDL-V 8 x 280	**37974**	8	white	280	290	30	240	220	100
TSDL-V 8 x 300	**37975**	8	grey	300	310	30	260	240	100

Admissible loads

Load table see page 78

Installation

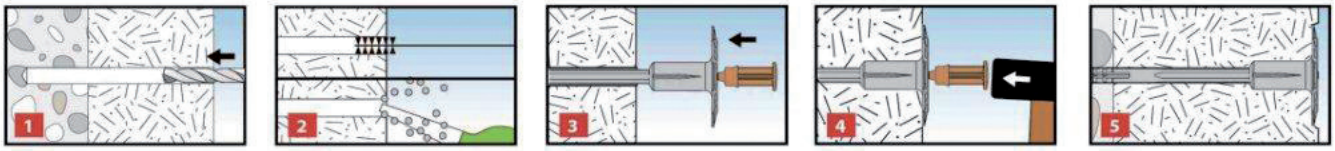

ETA-13/0075 - ETAG 014
A - B - C

B 6124
GEPRÜFT

Hammer fixing TSD-V KN

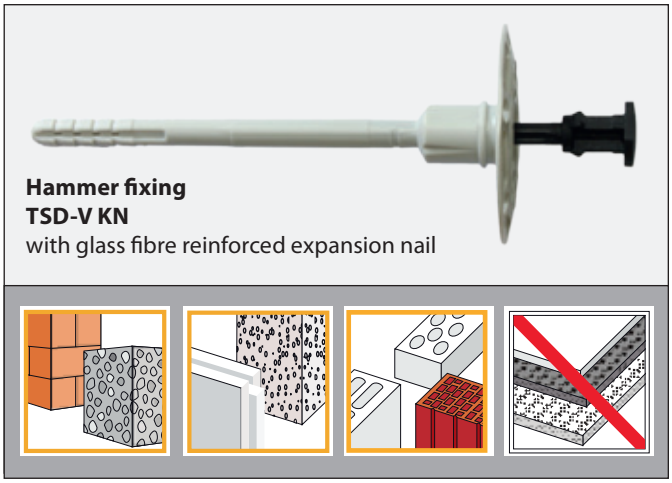

Suitability

Approved for:
concrete, full bricks and perforated bricks (Utilisation category: A - B - C)

Also suitable for:
Natural stone with dense structure, lightweight concrete full block and hollow block, aerated concrete

Suitable for the fixation of:
different insulation materials, e.g. in external thermal insulation composite systems (WDVS)

Characteristics

- fastening system, consisting of expansion dowel with holding plate and plastic nail
- Optimized expansion area in proven KEW tripartition for high security in many underlying surfaces
- plastic nail prevents heat loss and protects against penetrating moisture
- Holding plate with mortar-grippable surface which is also optimally adapted as carrier for plaster
- Pre-mounted fastening units reduce the mounting work
- European technical approval as multi-use fastening for the anchoring of bonded thermal insulation composite systems inspected according to ETAG 004
- according to ÖNORM B 6124 and meets all requirements for the utilisation categories A and B
- approved in combination with the insulation disk DSB also for soft dimensionally stable insulation materials

Remarks

After the drilling process, the drill hole has to be brushed or blown out. Old plaster is no stable ground. Accordingly, a larger size of the depth of the drill hole and the dowel length is to be selected.

Innovations, Aadvantages:

- optimally formed expansion area for a better stability in materials
- extended expansion area for a secure hold in »problematic materials«
- particularly for the flush mounting of the dowel plate in the insulation material modified head area
- unique glass fibre reinforced plastic nail ensures optimal strength values up to a length of 300 mm
- plastic nail with profiling for higher static loads
- thermal bridge optimised for a thermal transmission coefficient of 0.000 W/K

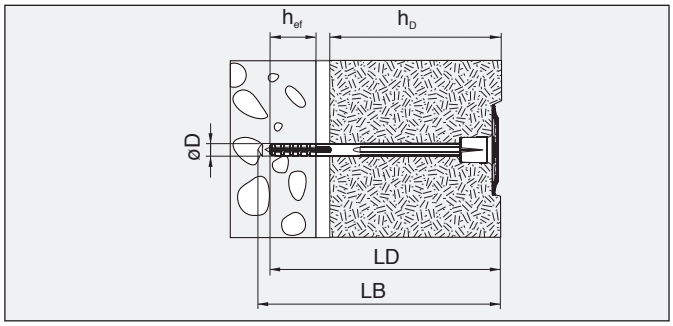

Technical data

ETA-13/0075 - ETAG 014
A - B - C

TSD-V - Hammer fixing

type	ref.-no	Ø D Ø anchor Ø drill in mm	colour special head	LD anchor length mm	LB min. drill-hole depth mm	h_{ef} eff. anchorage depth mm	h_D insu-lation strength new building +10mm glue mm	h_D insulation strength old building incl. glue + 20 mm existing stucco	qty. per box pcs.
TSD-V 8 x 100 KN	**37979**		8	100	110	30	60	40	200
TSD-V 8 x 120 KN	**37980**		8	120	130	30	80	60	200
TSD-V 8 x 140 KN	**37981**		8	140	150	30	100	80	200
TSD-V 8 x 160 KN	**37982**		8	160	170	30	120	100	200
TSD-V 8 x 180 KN	**37983**		8	180	190	30	140	120	200
TSD-V 8 x 200 KN	**37984**		8	200	210	30	160	140	200
TSD-V 8 x 220 KN	**37985**		8	220	230	30	180	160	100
TSD-V 8 x 240 KN	**37986**		8	240	250	30	200	180	100
TSD-V 8 x 260 KN	**37987**		8	260	270	30	220	200	100
TSD-V 8 x 280 KN	**37988**		8	280	290	30	240	220	100
TSD-V 8 x 300 KN	**37989**		8	300	310	30	260	240	100

Admissible loads

Load table see page 78

Installation

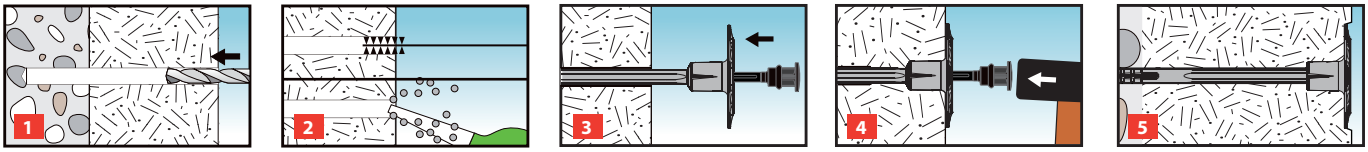

Hammer fixing – TSD-V

ETA-08/0315 - ETAG 014
A - B - C

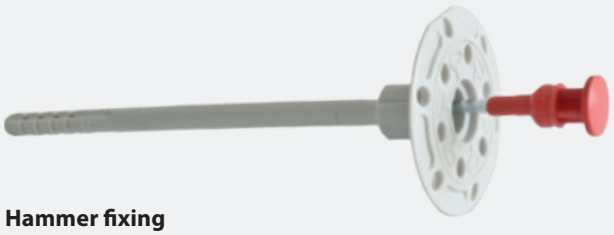

Hammer fixing
TSD-V
electrogalvanised nail with special plastic head

Suitability

Utilisation category: A/B/C
Approved for: concrete, full bricks and perforated bricks
Also suitable for:
Natural stone with dense structure, lightweight concrete full block and hollow block, aerated concrete
Suitable for the fixation of:
different insulation materials, e.g. in external thermal insulation composite systems (WDVS)

Characteristics

- Fastening system consisting of expansion dowel with holding plate and nail with special head
- Optimized expansion area in proven KEW tripartition for high security in many underlying surfaces
- Special head prevents heat losses and protects the nail against entering humidity
- Holding plate with mortar-grippable surface which is also optimally adapted as carrier for plaster
- Pre-mounted fastening units reduce the mounting work
- European technical approval as multi-use fastening for the anchoring of bonded thermal insulation composite systems inspected according to ETAG 004
- meets all requirements of the usage category A, B, C and D

Advice

After the drilling process, the drill hole has to be brushed or blown out. Old plaster is no stable ground. Accordingly, a larger size of the depth of the drill hole and the dowel length is to be selected.

Innovations, Advantages:

- optimally formed expansion area for a better stability in materials
- extended expansion area for a secure hold in »problematic materials«
- particularly for the flush mounting of the dowel plate in the insulation material modified head area
- particularly further developed sealing of the special head for the protection of the steel nail and the prevention of heat losses
- special nail with profiling for higher static loads
- the first knock-in dowel which meets the requirements of the ÖNORM B 6124 for the utilisation category C

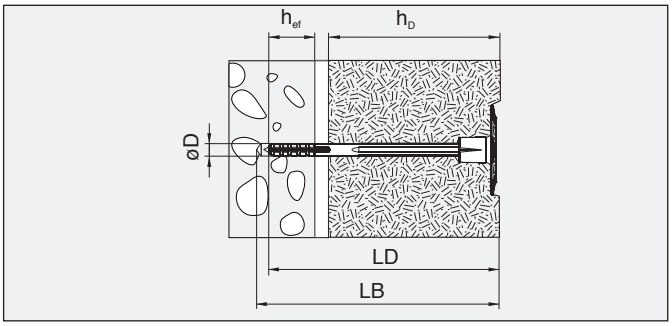

Technical data

ETA-08/0315 - ETAG 014
A - B - C

TSD-V - Hammer fixing

type	ref.-no	Ø D Ø anchor Ø drill in mm	colour special head	LD anchor length mm	LB min. drill-hole depth mm	h_{ef} eff. anchorage depth mm	h_D insu-lation strength new building +10mm glue mm	h_D insulation strength old building incl. glue + 20 mm existing stucco	qty. per box pcs.
TSD-V 8 x 100	**37380**	8	beige	100	110	30	60	40	200
TSD-V 8 x 120	**37381**	8	yellow	120	130	30	80	60	200
TSD-V 8 x 140	**37382**	8	green	140	150	30	100	80	200
TSD-V 8 x 160	**37383**	8	white	160	170	30	120	100	200
TSD-V 8 x 180	**37384**	8	orange	180	190	30	140	120	200
TSD-V 8 x 200	**37385**	8	brown	200	210	30	160	140	200
TSD-V 8 x 220	**37386**	8	blau	220	230	30	180	160	100
TSD-V 8 x 240	**37387**	8	red	240	250	30	200	180	100
TSD-V 8 x 260	**37388**	8	green	260	270	30	220	200	100
TSD-V 8 x 280	**37389**	8	white	280	290	30	240	220	100
TSD-V 8 x 300	**37390**	8	grey	300	310	30	260	240	100

Admissible loads

Load table see page 78

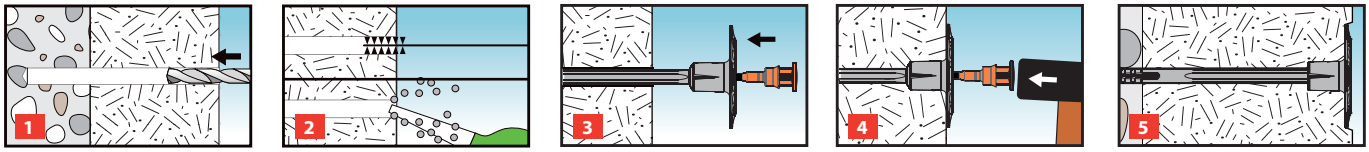

ETA-04/0030 - ETAG 014
A - B - C - D

Hammer fixing - TSD

Hammer fixing
TSD
zinc plated steel nail with special plastic head

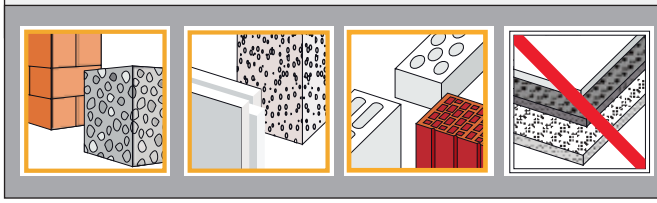

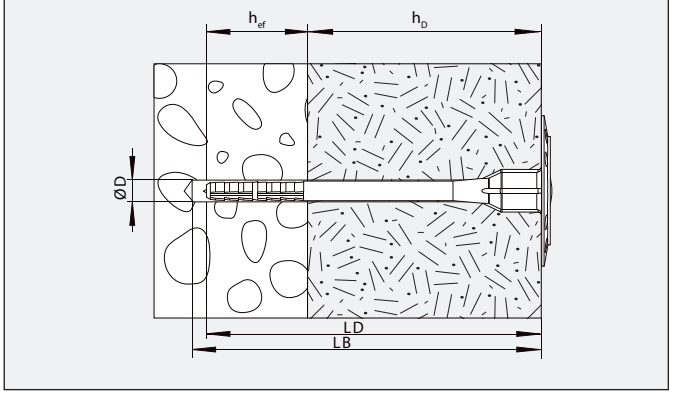

Suitability

Base materials:
concrete, natural stone, solid brick, limited suitability for hollow brick, hollow block, aircrete

For fixing of:
various types of insulation material, good plaster adhesion (ex.: for composite insulation systems)

Characteristics

- fixing system consisting of expansion plug with retaining disc and expansion nail with special head
- special head type prevents unnecessary leakage of heat and offers additional corrosion protection
- the special disc profile allows optimum adhesion of plaster
- pre-assembled units for reduced installation efforts with European Technical Approval as multiple
- fixing of glued composite insulation systems acc. to ETAG 004

Advice

The drill hole must be cleaned with brush and airpump. As existing render/ plaster may not be considered as base material a longer plug as well as a correspondingly deeper drill hole are required.

Technical Data

ETA-04/0030 - ETAG 014
A - B - C - D

TSD - with zinc plated steel nail
Sale only to system provider

type	ref.-no.	Ø D Ø plug Ø bit [mm]	color of nailf	LD length of plug [mm]	LB min. drill depth [mm]	h_{ef} min. depth of anchoring [mm]	h_D insulation strength incl. glue [mm]	h_D insulation strength old building incl. glue + 20 mm existing stucco [mm]	qty. per box pcs.
TSD 8 x 80	36309	8	red	80	90	40	40	-	200
TSD 8 x 100	36310	8	beige	100	110	40	60	40	200
TSD 8 x 120	36311	8	yellow	120	130	40	80	60	200
TSD 8 x 140	36312	8	green	140	150	40	100	80	200
TSD 8 x 160	36313	8	white	160	170	40	120	100	200
TSD 8 x 180	36314	8	orange	180	190	40	140	120	200
TSD 8 x 200	36315	8	brown	200	210	40	160	140	200
TSD 8 x 220	36316	8	blue	220	230	40	180	160	100
TSD 8 x 240	36317	8	red	240	250	40	200	180	100
TSD 8 x 260	36318	8	green	260	270	40	220	200	100
TSD 8 x 280	36319	8	white	280	290	40	240	220	100
TSD 8 x 300	36320	8	grey	300	310	40	260	240	100

Allowable loads

Load table as shown page 78

Installation

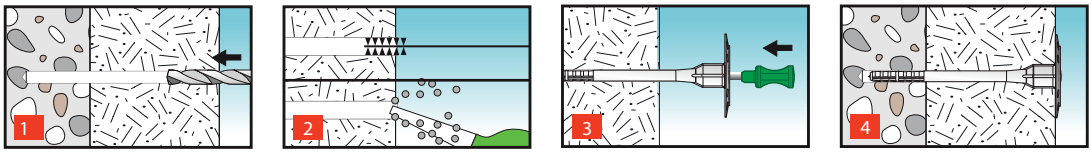

ETA-08/0314 - ETAG 014
A - B - C - D

Screw fixing – TSBD

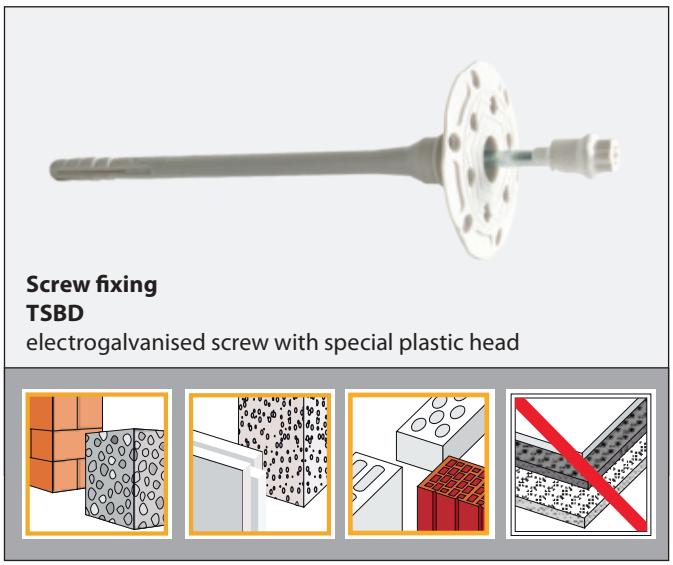

Screw fixing
TSBD
electrogalvanised screw with special plastic head

Innovations, Advantages

- optimally formed spread zone for a better support in building materials
- extended spread zone area for a safer support in »problematic building materials«
- shank section is especially designed for surface-flush placement of the dowel disk into the insulation material
- Further development of the KEW steel screw and prevention of heat loss

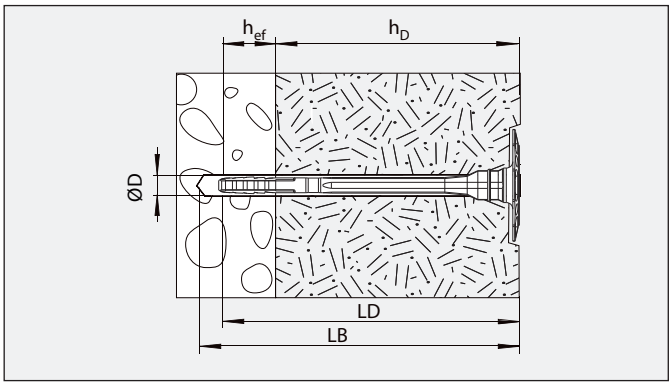

Suitability

suitable for:
concrete, light concrete, solid brick and perforated brick
Suitable for fixing of:
various types of insulation materials e.g. composite insulation systems (WDVS)

Characteristics

- fixing system consisting of expansion plug with retaining disk and screw with special head
- optimised spread zone in the reliable KEW 3-part-division for high tightness in many undergrounds
- special head prevents heat loss and protects the screw from invading humidity
- the special disc profile allows optimum adhesion of plaster
- etaining disk with mortar-gripping surface, which allows for optimal adhesion of plaster pre-assembled units for reduced installation efforts
- European technical approval as a multible fixing for the anchorage of glued composite insulation systems according to ETAG 004 has been applied for

Advice

The drill hole must be cleaned with a brush or an airpump. Exsisting rendering or plastering is not considered an acceptable sound base material. A longer plug as well as a correspondingly deeper drill hole are required.

Technical Data

ETA-08/0314 - ETAG 014
A - B - C - D

TSBD - Screw fixing

type	ref.-no	Ø D Ø anchor Ø drill in mm	colour special head	LD anchor length mm	LB min. drill- hole depth mm	h_{ef} eff. anchorage depth mm	h_D insu- lation strength new building +10mm glue mm	h_D insulation strength old building incl. glue + 20 mm existing stucco	qty. per box pcs.
TSBD 8 x 100	**37200**	8	beige	100	110	30	60	40	200
TSBD 8 x 120	**37201**	8	yellow	120	130	30	80	60	200
TSBD 8 x 140	**37202**	8	green	140	150	30	100	80	200
TSBD 8 x 160	**37203**	8	white	160	170	30	120	100	200
TSBD 8 x 180	**37204**	8	orange	180	190	30	140	120	200
TSBD 8 x 200	**37205**	8	brown	200	210	30	160	140	200
TSBD 8 x 220	**37206**	8	blue	220	230	30	180	160	100
TSBD 8 x 240	**37207**	8	red	240	250	30	200	180	100
TSBD 8 x 260	**37208**	8	green	260	270	30	220	200	100
TSBD 8 x 280	**37209**	8	white	280	290	30	240	220	100
TSBD 8 x 300	**37210**	8	grey	300	310	30	260	240	100

allowable loads

load table as shown on page 78

Installation

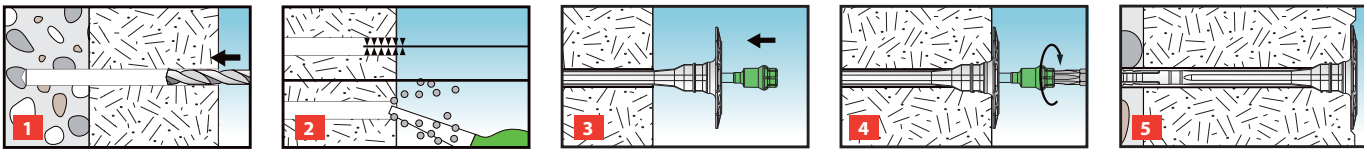

ETA-09/0184 - ETAG 014
A - B - C - D - E

Hammer fixing - DSH K

Hammer fixing InsuFix
DSH K
with glass fibre reinforced nail

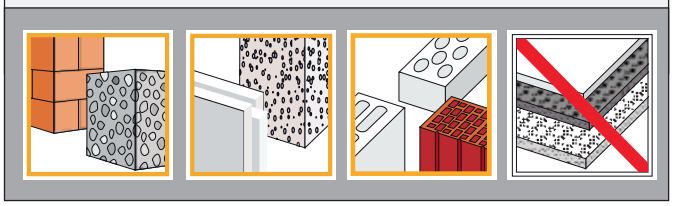

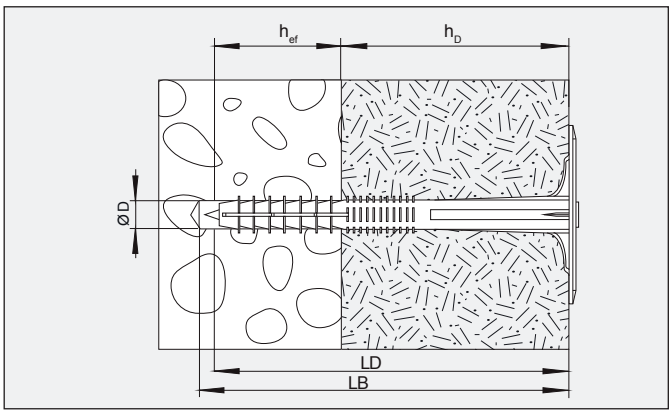

Suitability

Base materials:
concrete, natural stone, solid brick, limited suitability for hollow brick, hollow block, aircrete

For fixing of:
various types of insulation material, good plaster adhesion (ex.: composite insulation systems), may be used in Germany without official approval for building heights up to 8 m (acc. to DIN 1102)

Characteristics

- fixing system consisting of expansion plug with retaining disc (ø 60 mm) and plastic nail
- the nail tip may be broken off to allow for easier installation in very dense base materials
- the disc profile allows optimum adhesion of plaster
- the ribbed lower side of the disc as well as the profiled shank stiffens up the plug during installation
- the pre-expansion zone prevents the plug from slipping too deeply into the hole

Advice

The drill hole must be cleaned with brush and airpump. As existing render/ plaster may not be considered as base material a longer plug as well as a correspondingly deeper drill hole are required.

Technical Data

ETA-09/0184 - ETAG 014
A - B - C - D - E

DSH K - with plastic nail

type	ref.-no.	Ø D Ø plug Ø bit [mm]	LD plug length [mm]	LB min. drill depth [mm]	h_{ef} min. ancho-age depth [mm]	h_D thickness insulation materialss [mm]	qty. per box pcs.
DSH 10 x 90 K	**32490**	10	90	100	40	40 - 50	250
DSH 10 x 110 K	**32491**	10	110	120	40	60 - 70	250
DSH 10 x 130 K	**32492**	10	130	140	40	80 - 90	250
DSH 10 x 140 K	**32493**	10	140	150	40	90 - 100	250
DSH 10 x 150 K	**32494**	10	150	160	40	100 - 110	250
DSH 10 x 160 K	**32495**	10	160	170	40	110 - 120	250
DSH 10 x 170 K	**34119**	10	170	180	40	120 - 130	250
DSH 10 x 190 K	**33403**	10	190	200	40	130 - 150	250

Installation

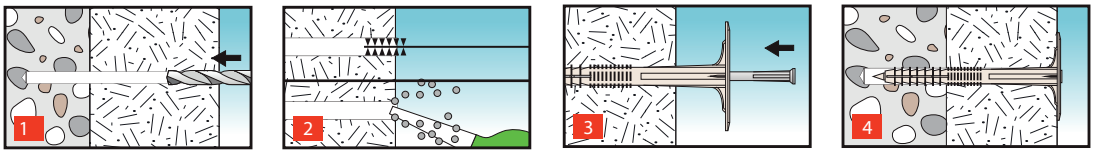

Loads

Technikal Data for composite insulation systems

Please consider the entire approval / assessment documents: TSDL-V - ETA-12/0148; TSDV KN - ETA-13/0075; TSD-V - ETA-08/0315; TSD - ETA-04/0030; TSBD - ETA-08/0314; DSH - ETA-14/0129

Characteristic resistance N 1) in [kN] to tensions loads for a single anchore in concrete and masonry

Base material	Bulk densityclass r [kg/dm³]	Compressive strength f_b [N/mm²]	Drill method	N_{Rk} 1) [kN]	N_{Rk} 1) [kN]	N_{Rk} 1) [kN]	N_{Rk} 1) [kN]	N_{Rk} 1) [kN]	N_{Rk} 1) [kN]
				TSDL-V	**TSD-V KN**	**TSD**	**TSBD**	**TSD-V**	**DSH K**
Concrete C12/15 (B15)			Hammer drilling	1,2	0,4	0,5	1,5	1,2	0,4
Concrete C16/20 – C50/60 (B25 - B55)			Hammer drilling	1,5	0,6	0,75	1,5	1,5	0,6
Sand-lime solid bricks KS according to DIN V106:2005-10 / EN 771-2:2011	≥1.8	12	Hammer drilling	1,5	0,6	0,8	1,5	1,5	0,6
Solid clay bricks according to DIN 105-100:2012-01 / EN 771-1:2011	≥1.7	12	Hammer drilling	1,5	0,6		1,5	1,5	0,9 4)
Solid clay bricks according to DIN 105-100:2012-01/EN 771-1	≥1.8	20	Hammer drilling			0,6			
Lightweight concret solid blocks Vbl 2 according to DIN V 18152-100:2005-10 / EN 771-3:2011	≥0.8	2	Hammer drilling	0,6			0,75	0,6	
Lightweight concret solid blocks Vbl 4 according to DIN V 18152-100:2005-10 / EN 771-3:2011	≥0.8	4	Hammer drilling				1,2		
Lightweight concret solid blocks Vbl 4 according to DIN V 18152-100:2005-10 / EN 771-3:2011	≥0.9	4	Hammer drilling			0,4			
Vertical perforated clay bricks HLz according to DIN 105-100:2012-01 / EN 771-1:2011 outer web thickness ≥ 11mm	≥1.0	12	Rotary drilling			0,4			
Vertical perforated clay bricks HLz according to DIN 105-100:2012-01 / EN 771-1:2011 outer web thickness = 12mm	≥1.0	12	Rotary drilling	0,9	0,3		0,9	0,9	0,5
Vertical perforated sand-lime-bricks KS L according to DIN V 106:2005-10 / EN 771-2:2011 outer web thickness ≥ 20mm	≥1.4	12	Rotary drilling	1,2 3	0,5	0,4 3)	1,5	1,2 3)	
Lightweight concret hollow blocks 4K Hbl according to DIN V 18151-100:2005-10 / EN 771-3:2011	≥0.9	2	Rotary drilling				0,75		
Lightweight concret hollow blocks 1K Hbl according to DIN V 18151-100:2005-10 / EN 771-3:2011	≥0.8	2	Rotary drilling	0,6	0,3		0,9	0,6	
Lightweight concret hollow blocks 1K Hbl according to DIN V 18151-100:2005-10 / EN 771-3:2011	≥1.2	4	Rotary drilling						0,5
Vertically perforated clay bricks according to ?NORM B 6124 outer web thickness ≥ 16mm	≥0.8	6	Rotary drilling			0,3			
Vertically perforated clay bricks according to ?NORM B 6124 outer web thickness ≥ 16mm	≥1.0	6	Rotary drilling				0,5		
Vertically perforated clay bricks according to ?NORM B 6124 outer web thickness ≥ 10mm	≥0,9	12	Rotary drilling	0,75	0,3			0,75	0,5 5)
Autoclaved aerated concrete AAC 4 according to EN 771-4	≥0,4	4	Rotary drilling						0,6
Lightweight aggregate concrete LAC 4 according to EN 1520:2011	≥0.9	4	Hammer drilling			0,4			
Lightweight aggregate concrete LAC 4 according to EN 1520:2011	≥1.0	4	Hammer drilling				0,4, 0,9 2)		
Lightweight aggregate concrete LAC 6 according to EN 1520:2011	≥1.0	6	Hammer drilling				0,5, 1,2 2)		

			TSDL-V	TSD-V KN	TSD	TSBD	TSD-V	DSH K
Installation characteristics								
effective anchoring depth	h_{ef} =	[mm]	30	30	30	30 / 50 6)	30	40
depth of drilled hole	h_1 ≥	[mm]	40	40	40	40 / 60 6)	40	50
Nominal diameter of drill bit	d_0 =	[mm]	8	8	8	8	8	10

Minimum thickness of base material, edge distance and anchor spacing								
Minimum thickness of base material	h =	[mm]	100	100	100	100	100	100
Minimum spacing	s_{min} =	[mm]	100	100	100	100	100	100
Minimum edge distance	c_{min} =	[mm]	100	100	100	100	100	100

Scheme of distance and spacing

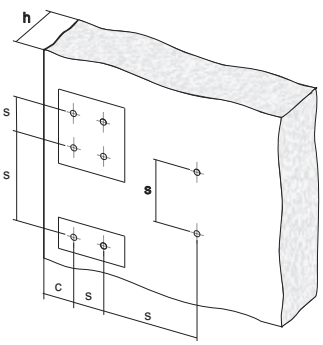

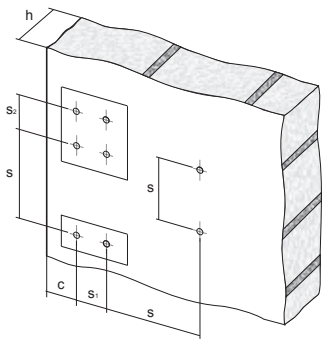

1) If there are no other national regulations, a partial safety coefficient of γ_M 2,0 has to be used.
2) applies for an effective anchoring depth of h_{ef} = 50mm - differing from the standard of h_{ef} = 30mm.
3) outer web thickness ≥ 22mm
4) Bulk densityclass 20
5) Bulk densityclass 15
6) The depth given in pos. 2 applies exclusively for the admissible enlarged anchoring depth h_{ef} ≥ 50mm in the building material category D.

Metal Insulation Fixing – MDSH

metal insulation fixing – MDSH
sendzimir-galvanised steel sheet
or stainless steel sheet A2

metal insulation disk – MDSB
sendzimir-galvanised steel sheet
or stainless steel sheet A2

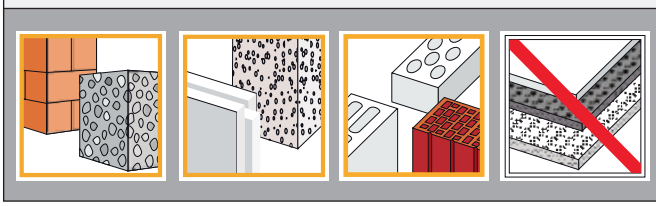

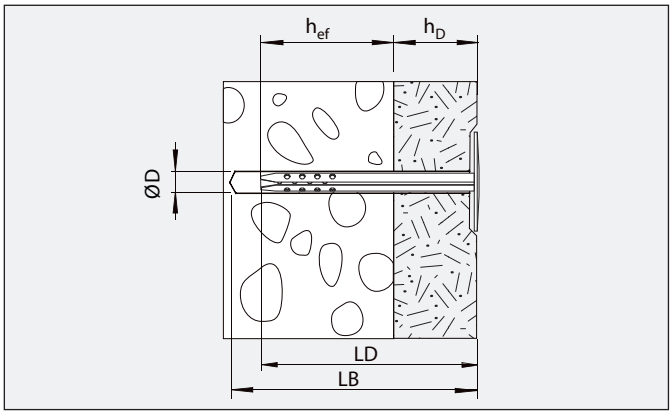

Innovation / Advantages

- simple and profitable in usage due to its fixing by knocking in
- no pre-drilling necessary for porous concrete undergrounds
- fire prevention certificate with building material classification A1 pursuant to DIN 4102 for the galvanised version and for anchor depth h eff 40 mm
- may be applied on underside of ceilings
- no additional fixing parts such as expanding nails necessary

Characteristics:

- fixing system consisting of a spring dowel pin with firmly crimped retaining disk (ø 35 mm)
- pring steel spring dowel pin anchors safely in the cladding of the boring drill due to bracing during knocking in
- profile of the spring dowel pin provides protection against creasing during knocking in
- fire-resistant fixing up to F 120 - AB pursuant to DIN 4102
- stainless steel A2 - quality for use in wet areas and the exterior
- to be used for fixing of soft insulation material in combination with the metal insulation fixing disk MDB 80

Suitability:

Suitable for:
concrete, solid brick, perforated brick and porous concrete

suitable for fixing of:
pressure-resistant and soft insulation materials, e.g. polystyrene, PU-hard foam panels, glass wool, rock wool, coconut mats

Advice

The drill hole must be cleaned with a brush or an air pump. Existing rendering or plastering is not considered an acceptable sound base material. A longer plug as well as a correspondingly deeper drill hole are required.

Installation

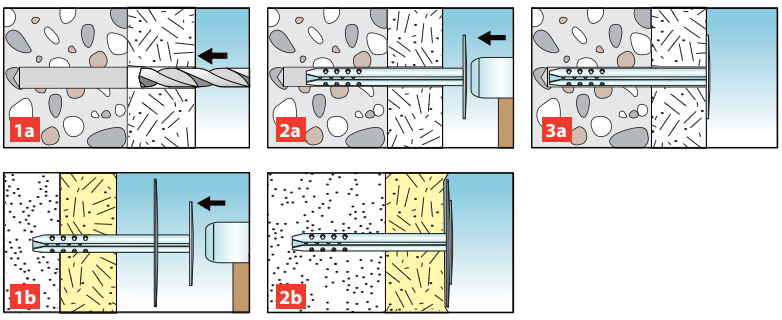

Metal Insulation Fixing – MDSH

Fire resistance classifikation
F 120
as show ETAG 020

Technical Data

MDSH - metal insulation fixing sendzimir- galvanised

type	ref.-no.	ØD Ø anchor Ø drill [mm]	LD anchor length [mm]	LB min.drill-hole depth [mm]	h_{ef} eff. anchorage depth [mm]	h_D max. usable length [mm]	qty. per box pcs.
MDSH 30	**37301**	8	90	100	50	40	250
MDSH 60	**37302**	8	110	120	50	60	250
MDSH 90	**37303**	8	140	150	50	90	250
MDSH 120	**37304**	8	170	180	50	120	250
MDSH 150	**37305**	8	200	210	50	150	250

MDSH - metal insulation fixing stainless steel A2

MDSH 30 A2	**37307**	8	90	100	50	40	250
MDSH 60 A2	**37308**	8	110	120	50	60	250
MDSH 90 A2	**37309**	8	140	150	50	90	250
MDSH 120 A2	**37310**	8	170	180	50	120	250
MDSH 150 A2	**37311**	8	200	210	50	150	250

Technical Data

MDSB - metal insulation disk sendzimir- galvanised

type	ref.-no.	qty. per box pcs.
MDSB 80	**37306**	250

MDSB - metal insulation disk stainless steel A2

MDSB 80 A2	**37312**	250

ISO Plug - ID

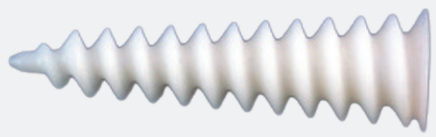

ISO Plug
ID

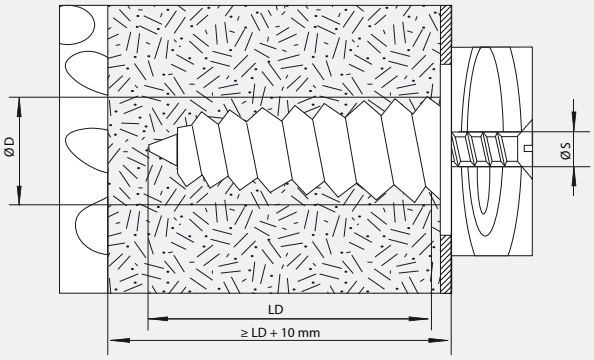

Suitability

Base materials:
rigid insulation materials (Styrodor, Styropor, rock wool) and ridgid polyurethane foams, especially in connection with composite insulation systems

For fixing of:
outdoor lights, bell signs, house number plates, newspaper boxes, letter boxes, movement alarm units, downpipes and shields

Characteristics

- permanent and fast-to-install fixing in rigid foam plates
- The ID is put into the insulation on surface level without pre-drilling.
- the anchor screw may also be installed with a cordless drill without prior hole drilling
- self undercutting system for optimal anchorage
- ideal border by the large plate of 25mm
- commercially available bit holders Torx 40 for the ID 50 and the Allen key 10 for the ID 85

Advice

The insulation dowel ID must not be shortened in length.
At plastered rigid foam boards (e.g. insulated house walls etc.), the plastering must be drilled out up to the maximum dowel Ø, before installing the insulation dowel.

In order to prevent the penetration of water into the insulation material, the edge of the dowel should be sealed after completion of the assembly.

Technical Data

ID - ISO Plug

type	ref.-no.	D max. Ø plug [mm]	L length of plug [mm]	length of inner bore [mm]	Ø S Ø screw [mm]	for bit size Bit/SW	qty. per box pcs.	outer carton pcs.
ID 50	38049	18	50	25	M4 / 4,0	Torx 40	50	400
ID 85	38050	22	85	25	M8 / 8,0	⬢ 10	20	160

Pullout loads in N* undscrew-in depth

	Pullout loads		screw-in depth			
			chipboard screw		metric-thread	
	Styropor (PS 15)	rock wool	Styropor (PS 15)	rock wool	Styropor (PS 15)	Steinwolle
ID 50	110 N	60 N	35	35	35	30
ID 85	250 N	90 N	45	35	40	30

Installation

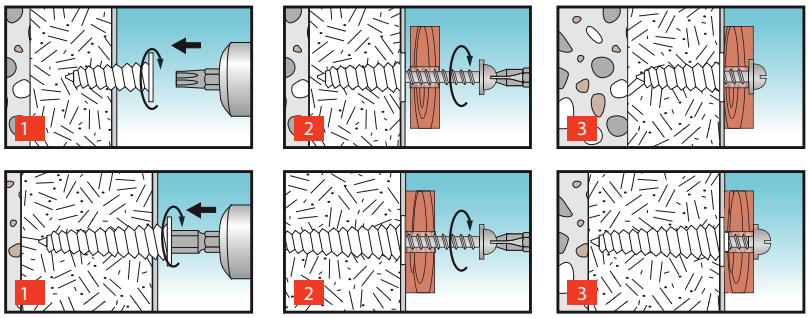

Universal Insulation Disk - UDS

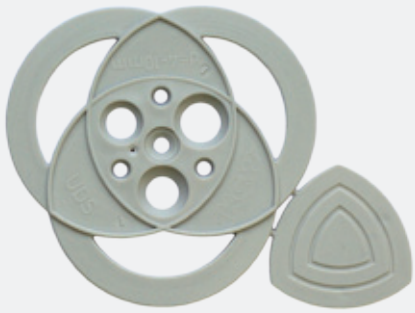

universal insulation disk
UDS
for combinations with:

nail plug ND S

frame plug RD and RDD

nails with countersunk head as well as countersunk head screws Ø 3 - 7 mm, minimum diameter of the head Ø 6 mm

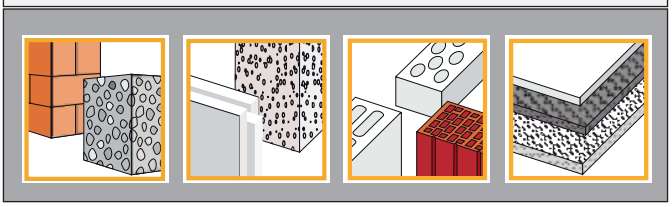

Characteristics

- universally applicable fixing system
- high flexibility due to the use of various, widely spread fixing elements
- also applicable on a variety of undergrounds (masonry, wood and metal substructures etc.) due to various fixing elements
- applicable for all kinds of thicknesses of insulation material due to free choice of lenghts for the fixing elements
- Flexible bows level irregularities and tensions of the insulation material and allow for a permanent pressing against the material
- covering cap prevents heat loss and provides protection in all placement positions for the fixing elements
- mortar gripping surface serves as a carrier for renderings/ plasterings
- applicable as constructive dowel screw pane on wood and plate element building materials through combination with the respective screws
- reduction of storage costs since a single insulation disk is universally suitable for a variety of applications

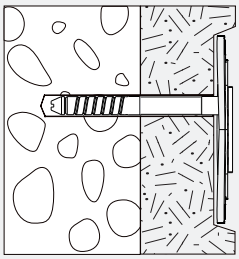

Suitability

suitable for:
arious base constructions (cf. individual fixing device)

for the fixing of:
various heat or sound insulating insulation materials, sealing sheets, foils, mesh fabrics e.g. in compound insulation systems (ETICS)

Application

universal insulation disk in combination with nail plug ND S Ø 6-8 mm, frame plug RD and RDD Ø 8-10 mm, countersunk bolts (e. g. wood screws, chipboard screws, countersunk flat head tapping screws) and nails in various designs Ø 3 - 7 mm - minimal possible head diametre 6 mm

Technical Data

UDS - Universal Insulation Disk

type	ref.-no.	Ø Insulation Disk [mm]	qty. per box pcs.
UDS	**37196**	84	200

Installation

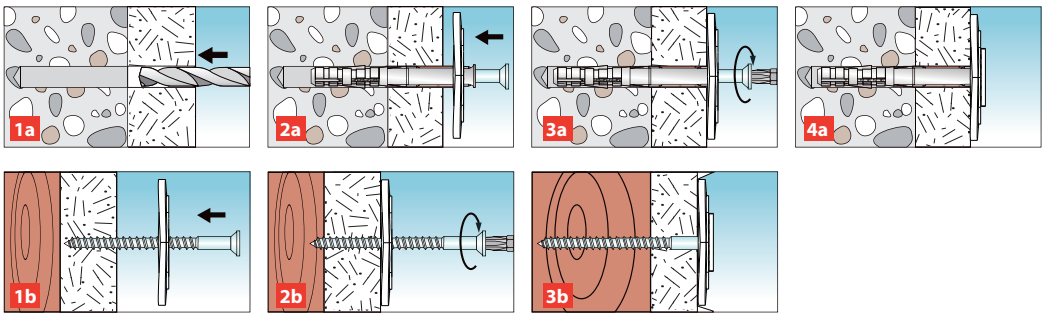

ETA-04/0030 - ETAG 014 A - B - C - D
ETA-08/0314 - ETAG 014 A - B - C - D
ETA-08/0315 - ETAG 014 A - B - C
ETA-12/0148 - ETAG 014 A - B - C
ETA-13/0075 - ETAG 014 A - B - C

Insulation Disc - DSB

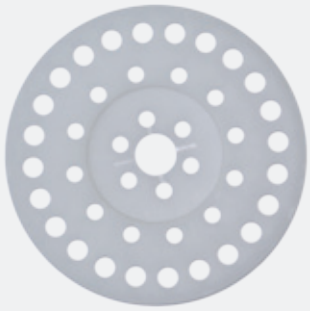

Insulation Disc DSB
Suitable for Thermo nailplugs

Applications

to be used together with Thermo nail plug and insulation plug to fix non-rigid insulation materials

Characteristics

- disc profile offers good plaster adhesion
- suitable to be combined with Insulation Plug KEW DSH and Thermo nail plug KEW TSD

Technical Data

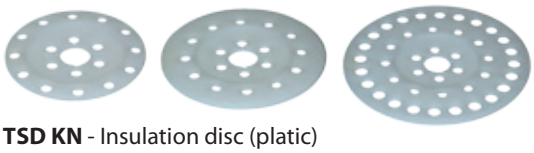

TSD KN - Insulation disc (platic)

type	ref.-no.	Ø Insulation Disk [mm]	qty. per box
DSB 90	**35396**	90	200
DSB 110	**35397**	110	200
DSB 140	**35398**	140	200

Railsocket Connector - SSV

Railsocket connector SSV

Applications

Connects, bridges and attaches cover profiles, end sections, holds and connects rails/ channels in vertical and horizontal joints of composite insulation systems (WDVS)

Characteristics

- Fast and reliable connection of profiles by simply fitting together
- Also available: connector kit with nail plugs and spacers

Technical Data

MTS - Railsocket connector

type	ref.-no.	length [mm]	qty. per box pcs.	qty. per box pcs.
SSV 30	**36719**	30	100	1600
SSV 1150	**36740**	1150	5	-

MTS - Connector kit

type	ref.-no.	content	qty. per box pcs.
MTS 6	36197	nailplug ND 6 x 60 Z spacer unit ASH 3 railsocket connector SSV 30	75 50 10
MTS 8	36193	nail plug ND 8 x 80 Z spacer unit ASH 3 railsocket connector SSV 30	75 50 10

Notizen

Scaffold Fixings

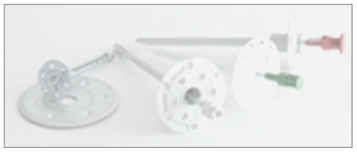

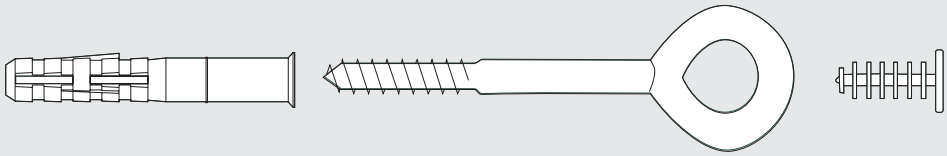

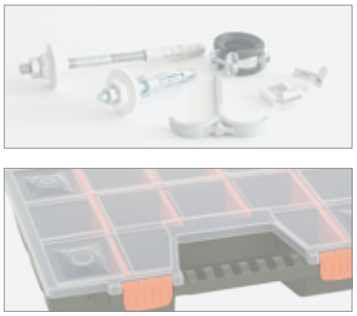

Scaffold Plug - GD

NYLON WARRANTY

Notes

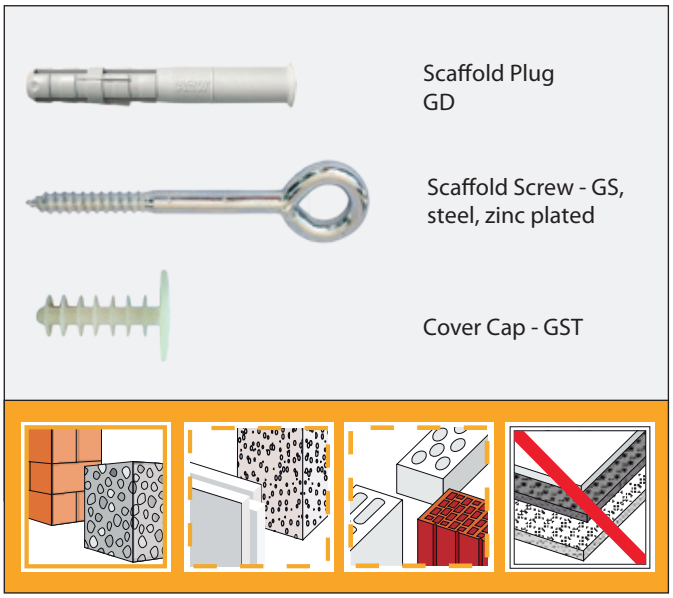

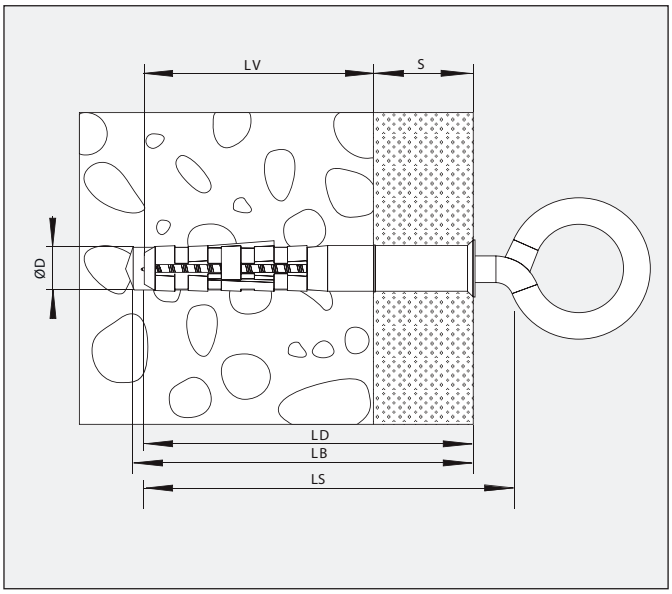

Suitability

Base materials:
concrete, natural stone, solid brick, limited suitability for hollow brick, hollow blocks, aircrete

For fixing of:
standing and climbing scaffolds, bracing cables, safety harnesses

Characteristics

- fixing system with extended nylon plug and special eye screw
- safe bridging of plaster and insulation material
- etaining wedges prevent rotation in the drill hole even under unfavourable conditions
- cover cap to prevent the base material from exposure to humidity once the fixing is not needed any more

Advice

When installing scaffold fixings please observe the prescriptions of DIN 4420 and those of the notice "installation of plugs to fix scaffoldings" made out by the German professional association of building trades. The maximum holding power can only be achieved if:

- the drill hole is cleaned with brush and airpump
- the drill hole dimensions correspond to those stated by the manufacturer

Recommended safe working loads in kN*

	con-crete C15	Solid bricks Mz 12	solid sand lime stone KS 12	hollow block Hbl	aircrete P2	hollow brick HLz 12	light hollow brick LHLz 12
GD 14 + GS 12	2,5	1,6	1,2	0,8	0,5	0,5	0,5

* the loads stated are recommended safe working loads valid for general fixings and confirmed strength of base material indicated. Lower loads apply in case of render, insulation material (if not considered), other non load bearing areas of the base material or too small edge/ joint distances.

Installation

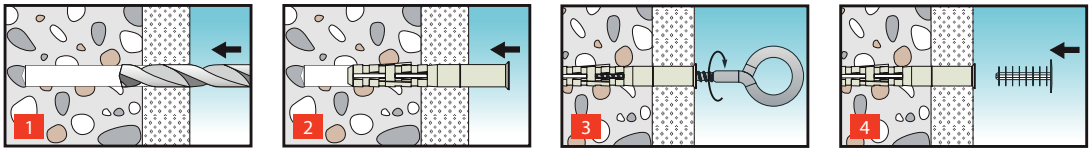

Scaffold Plug - GD

Technical Data

GD - Scaffold plug

type	ref.-no.	ØD Ø Plug Ø Bit [mm]	LD plug length [mm]	LB min. drill depth [mm]	LV min ancho-rage depth [mm]	ØS max. thickness of render/ insulation [mm]	qty. per box pcs.
GD 14 x 70	**32040**	14	70	85	70	-	50
GD 14 x 100	**32041**	14	100	115	70	30	50
GD 14 x 135	**32042**	14	135	150	70	65	40

GST - Cover cap, made of polyethylene

type	ref-no.	Ø cover plug [mm]	length of cover cap [mm]	qty. per box pcs.
GST 14 x 40	**32046**	24	40	100
GST 14 x 80	**34372**	24	80	100

Technical Data

GS - steel, zinc plated, class 4.8

type	ref.-no.	ØS Ø screw [mm]	LS screw length [mm]	qty. per box pcs.
GS 8 x 80 [1]	**34005**	8	80	25
GS 8 x 100 [1]	**34006**	8	100	25
GS 8 x 120 [1]	**34007**	8	120	25
GS 10 x 160 [1]	**34008**	10	160	25
GS 12 x 90	**32192**	12	90	25
GS 12 x 120	**32193**	12	120	25
GS 12 x 160	**32194**	12	160	25
GS 12 x 190	**32195**	12	190	25
GS 12 x 230	**32196**	12	230	25
GS 12 x 300	**34009**	12	300	25
GS 12 x 350	**32197**	12	350	25

[1] not for GD 14

Notes

Remedial Fixings

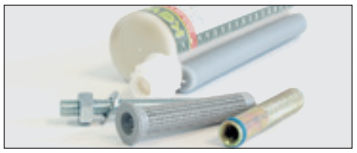

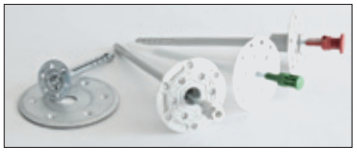

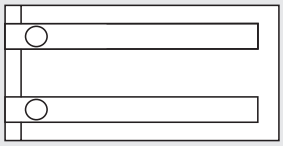

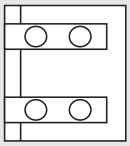

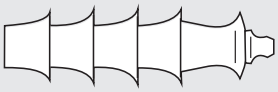

Masonry Wedge - MWK

Masonry Wedge
MWK

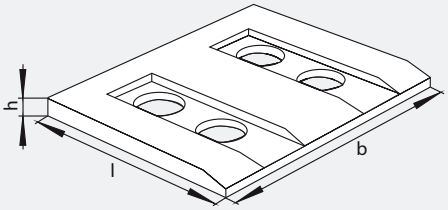

Application

the masonry wedge is used in connection with the installation of horizontal humidity stops in existing constructions

Characteristics

- secures/ stabilizes sequential saw cuts in a wall
- used together with expandable mortar to stop rising humidity

Technical Data

MWK - for structural wedging of saw cuts

type	ref-no.	l length [mm]	b width [mm]	h height [mm]	qty. per box pcs.
MWK 7 - 100	**30348**	100	130	7	220
MWK 9 - 100	**30110**	100	130	9	190
MWK 11 - 100	**30112**	100	130	11	150
MWK 5 - 250	**30430**	250	132	5	135
MWK 6 - 250	**37121**	250	132	6	110
MWK 7 - 250	**30132**	250	132	7	90
MWK 8 - 250	**30074**	250	132	8	81
MWK 9 - 250	**30075**	250	132	9	72
MWK 10 - 250	**30076**	250	132	10	66
MWK 11 - 250	**30077**	250	132	11	60

Masonry Injector - MIN

NYLON WARRANTY

Masonry injector
MIN

Setting tool

Application

the masonry injector is used in connection with the installation of horizontal humidity stops in existing constructions as well as for pest control purposes

Characteristics

- used in sequential rows of drill holes
- sealing liquid is injected through injection nipple until saturation

Technical Data

WZ-MIN - injector with lubrication fitting for pressure injections

type	ref-no.	Ø plug [mm]	length [mm]	colour	qty. per box pcs.
MIN 9	**30113**	9	48	gray/nat. colourr	1000
MIN 12	**31490**	12	69	gray/nat. colour	1000
MIN 18	**31491**	18	79	gray/nat. colourr	1000

WZ-MIN - setting tool

WZ-MIN	**31493**	1

Electrical Fixings

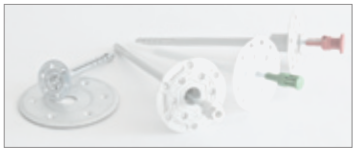

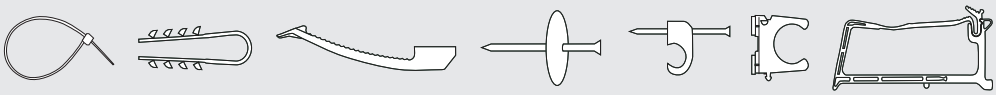

Electrical Fixings

Technical Data

KB - cable tie, natural colour

KB - cable tie, black

suitability: bundling and fixing of cables

type	ref.-no./ natur	ref.-no./ schwarz	bundle Ø [mm]	qty. per box pcs.	outer carton pcs.
KB 2,2 x 75	**33210**	**34572**	15	100	20000
KB 2,5 x 98	**33211**	**34573**	18	100	15000
KB 2,5 x 135	**33212**	**34574**	33	100	10000
KB 2,6 x 160	**33213**	**34575**	40	100	10000
KB 2,6 x 200	**33214**	**34576**	50	100	10000
KB 3,6 x 140	**33215**	**34577**	33	100	10000
KB 3,6 x 200	**33216**	**34578**	50	100	5000
KB 3,6 x 290	**33217**	**34579**	76	100	5000
KB 3,6 x 370	**36421**	**36439**	103	100	-
KB 4,5 x 120	**36422**	**36440**	24	100	-
KB 4,5 x 160	**33218**	**34580**	40	100	5000
KB 4,8 x 178	**36423**	**36441**	45	100	-
KB 4,8 x 200	**33219**	**34581**	50	100	5000
KB 4,8 x 290	**33220**	**34582**	79	100	5000
KB 4,8 x 370	**33221**	**34583**	102	100	4500
KB 4,8 x 390	**36424**	**36442**	106	100	-
KB 4,8 x 430	**36425**	**36443**	115	100	-
KB 7,8 x 120	**36426**	**36444**	25	100	-
KB 7,8 x 180	**36427**	**36445**	45	100	-
KB 7,8 x 240	**36428**	**36446**	63	100	-
KB 7,8 x 300	**36429**	**36447**	80	100	-
KB 7,8 x 365	**33222**	**34584**	100	100	1500
KB 7,8 x 450	**36430**	**36448**	130	100	-
KB 7,8 x 540	**36431**	**36449**	158	100	-
KB 7,8 x 750	**36432**	**36450**	200	100	-
KB 9,0 x 780	**36433**	**36451**	233	100	-
KB 12,5 x 500	**36435**	**36453**	143	50	-
KB 12,5 x 1000	**36438**	**36456**	302	50	-

KB - cable tie with locating hole, nature
suitability: bundling and fixing of cables

type	ref.-no.	bore [mm]	bundle Ø [mm]	qty. per box pcs.	outer carton pcs.
KB 3,6 x 150 B	**36382**	4,5	32	100	-
KB 4,8 x 200 B	**36383**	5,2	50	100	-

BS D - twin socket

BS D 3,6	**36392**	**36394**	19 x 19	3,6	100
BS D 3,6 K *	**36396**	**36398**	19 x 19	3,6	100
BS D 4,8	**36393**	**36395**	27 x 27	4,8	100
BS D 4,8 K *	**36397**	**36399**	27 x 27	4,8	100

* adhesive socket base

KB A - cable tie base
Eignung: fixing and securing cable ties

KB A	**36457**	9,0	100

KB V - cable tie connector
Eignung: connecting cable ties

KB V	**36458**	9,0	100

KBZ 1

KBZ 2

KBZ 3

KBZ 4

KB Z1 - cable tie tightening tool, DIY tool

type	ref.-no.	suitable for	qty. per box pcs.
KBZ 1	**36374**	KB 2,2 - 4,8	1

KB Z2 - cable tie tightening tool, metal, professional tool

KBZ 2	**36375**	KB 2,2 - 4,8	1

KB Z3 / Z4 - cable tie tightening tool, plastic, professional tool

KBZ 3	**36376**	KB 2,2 - 4,8	1
KBZ 4	**36377**	KB 4,8 - 7,8	1

KKB - plastic cable clasp
suitability: fixing of cables of different diameters up to 8, 10, and 16 mm (NYM 3 x 1,5 mm) with KEW plugs

type	ref.-no.	number of cables [mm]	length [mm]	width [mm]	qty. per box pcs.	outer carton pcs.
KKB 8	**33691**	8	128	20	50	800
KKB 16	**33693**	16	220	20	50	800

NSBE - plastic cable disc, rectangular
suitability: fixing of cables in pre-cut grooves, routes, walls, in aircrete, solid gypsum board, and brickwork

type	ref.-no.	length x width/ Ø of disc [mm]	steel nail [mm]	qty. per box pcs.	outer carton pcs.
NSBE 40	**33781**	44 x 22	2,5 x 40	100	1000
NSBE 50	**33782**	44 x 22	2,5 x 50	100	1000
NSBE 60	**33783**	44 x 22	2,5 x 60	100	1000

Technical Data

NSBEF - plastic cable disc, rectangular, with locking edges

type	ref.-no.	length x width/ Ø of disc [mm]	steel nail [mm]	qty. per box pcs.	outer carton pcs.
NSBEF 40	**33784**	44 x 22	2,5 x 40	100	1000
NSBEF 50	**33785**	44 x 22	2,5 x 50	100	1000
NSBEF 60	**33786**	44 x 22	2,5 x 60	100	1000

NSB - plastic nail disc

NSB 27	**32580**	27	-	3500	-
NSB 27	**32581**	27	-	700	7000
NSB 27 / 2,0 x 40	**32582**	27	2,0 x 40	300	3000
NSB 27 / 2,0 x 50	**32583**	27	2,0 x 50	250	2500
NSB 34	**32584**	34	-	2200	-
NSB 34	**32585**	34	-	400	4000
NSB 34 / 2,0 x 50	**32586**	34	2,0 x 50	150	1500
NSB 34 / 2,0 x 60	**32587**	34	2,0 x 60	150	1500
NSB 34 / 2,5 x 70	**32588**	34	2,5 x 70	100	1000
NSB 34 / 3,3 x 40	**32589**	34	3,3 x 40	150	1500
NSB 34 / 3,3 x 50	**32590**	34	3,3 x 50	150	1500
NSB 34 / 3,3 x 60	**32591**	34	3,3 x 60	100	1000

NS - plastic cable clip
suitability: fixing of cables (5-12 mm) to chipboard, hardboard, wood, aircrete, solid gypsum board etc..

type	ref.-no.	clamping range [mm]	steel nail [mm]	qty. per box pcs.	outer carton pcs.
NS 3 - 5 / 18	**35949**	3 - 5	1,7 x 18	200	10800
NS 3 - 5 / 23	**35950**	3 - 5	1,7 x 23	200	10800
NS 3 - 5 / 30	**35951**	3 - 5	1,7 x 30	200	10800
NS 5 - 7 / 18	**32782**	5 - 7	2 x 18	200	10800
NS 5 - 7 / 23	**32783**	5 - 7	2 x 23	200	10800
NS 5 - 7 / 30	**32784**	5 - 7	2 x 30	200	10800
NS 5 - 7 / 35	**32785**	5 - 7	2 x 35	200	10800
NS 7 - 12 / 18	**32786**	7 - 12	2 x 18	100	3600
NS 7 - 12 / 23	**32787**	7 - 12	2 x 23	100	3600
NS 7 - 12 / 30	**32788**	7 - 12	2 x 30	100	3600
NS 7 - 12 / 35	**32789**	7 - 12	2 x 35	100	3600
NS 7 - 12 / 40	**32790**	7 - 12	2 x 40	100	3600
NS 7 - 12 / 50	**32791**	7 - 12	2 x 50	100	2700
NS 7 - 12 / 60	**32792**	7 - 12	2 x 60	100	2700
NS 10 - 14 / 30	**32793**	10 - 14	2 x 30	100	2700
NS 10 - 14 / 35	**32794**	10 - 14	2 x 35	100	2700
NS 10 - 14 / 40	**32795**	10 - 14	2 x 40	100	2700
NS 14 - 20 / 30	**35953**	14 - 20	2 x 30	100	1600
NS 14 - 20 / 35	**35954**	14 - 20	2 x 35	100	1600
NS 14 - 20 / 40	**35955**	14 - 20	2 x 40	100	1600
NS 7 - 12 / 23	**32796**	7 - 12	2 x 23	500	4000
NS 7 - 12 / 30	**32797**	7 - 12	2 x 30	500	4000
NS 7 - 12 / 35	**32798**	7 - 12	2 x 35	500	4000
NS 7 - 12 / 40	**32799**	7 - 12	2 x 40	500	4000

KSH - multiple plastic cable holder
suitability: fixing of cables of various diameters

type	ref.-no.	qty. of cables [mm]	height x length [mm]	width [mm]	qty. per box pcs.	outer carton pcs.
KSH 15	**33694**	15	53 x 78	50	50	400
KSH 30	**33695**	30	53 x 131	25	25	250

RS - plastic pipe clamp
suitability: to fix light to heavy insulated as well as steel reinforced pipes with KEW plugs

type	ref.-no.	nominal value PG	nominal value IRO DIN 49026/ DIN 49017	nominal value IEC	clamping area [mm]	qty. per box pcs.	outer carton pcs.
RS M 12 (IRO 11)	**32172**		11	M 12	12 - 13	100	3200
RS M 16 (PG 9)	**32068**	9	13,5	M 16	15 - 16	100	3200
RS PG 11	**32069**	11	19		18 - 19	100	2900
RS M 20 (PG 13,5)	**32070**	13,5	- / 19	M 20	20 - 21	100	2000
RS PG 16	**32071**	16			22 - 23	100	2000
RS M 25 (IRO 23)	**32175**		23 / -	M 25	24 - 25	50	1450
RS PG 21	**32072**	21	- / 23		28 - 29	50	1450
RS M 32 (IRO 29)	**32176**		29 / -	M 32	31 - 32	50	640
RS PG 29	**32073**	29			36 - 37	40	640
RS M 40 (IRO 36)	**32177**		36 / -	M 40	39 - 40	30	300
RS M 50 (PG 36)	**32074**	36		M 50	46 - 48	20	320
RS M 63 (PG 48)	**32076**	48		M 63	59 - 61	15	240

NS - plastic cable clip without nail

type	ref.-no.	clamping range [mm]	steel nail [mm]	qty. per box pcs.	outer carton pcs.
NS 3 - 5	**36725**	3 - 5	-	200	10800
NS 5 - 7	**36726**	5 - 7	-	200	10800
NS 7 - 12	**36727**	7 - 12	-	100	3600
NS 10 - 14	**36728**	10 - 14	-	100	2700
NS 14 - 20	**36729**	14 - 20	-	100	1600

Electrical Fixings

Technical Data

SS - plastic cable strap
suitability: fixing of cables, wire bundles, flexible and rigid pipes

type	ref.-no.	Ø drill bit [mm]	min. drill depth for smallest clamp. range [mm]	clamping range [mm]	qty. per box pcs.	outer carton pcs.
SS 3 / 13	**33599**	6	35	3 - 13	100	2700
SS 8 / 28	**33600**	6	50	8 - 28	100	1600
SS 20 / 40	**33601**	6	50	20 - 40	100	800

VV - cable tie loop
Eignung: easy bundling of cables

type	ref.-no./ nat. colour	ref.-no./ black	size [mm]	Ø clamping range [mm]	qty. per box pcs.
VV 22,9	**36622**	**36627**		5,1 - 7,6	100
VV 26,2	**36623**	**36628**		7,6 - 10,2	100
VV 30,5	**36624**	**36629**		10,2 - 12,7	100
VV 34,5	**36625**	**36630**		13,5 - 16,0	100
VV 39,4	**36626**	**36631**		17,8 - 20,3	100

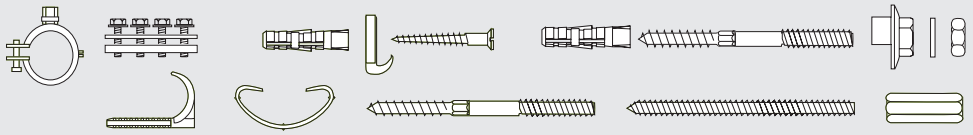

Heating and Sanitary Fixings

Technical Data

WTB - washbasin fixing with stud screw
Suitability: fixing washbasins in concrete and masonry

type	ref.-no.	Ø drill bit [mm]	drill. depth [mm]	min. anchorage depth [mm]	max. thickness of ceramic [mm]	qty. per box pcs.	outer carton pcs.
WTB 10 x 120	**31088**	12	80	65	30	10	80
WTB 10 x 140	**31089**	12	80	65	50	10	80

WTB VSH - washbasin fixing with metal hollow wall plug
Suitability: fixing washbasins in boards and panels such as plasterboard or gypsum fibreboard as well as in hollow bricks

type	ref.-no.	Ø drill bit [mm]	min. anchorage depthe [mm]	max. thickness of ceramic [mm]	qty. per box pcs.	outer carton pcs.
WTB 10 x 140 VSH	**37321**	15	95	35	10	80

WTB MHD - washbasin fixing with metal hollow wall plug
Suitability: fixing washbasins in boards and panels such as plasterboard or gypsum fibreboard as well as in hollow bricks

type	ref.-no.	Ø drill bit [mm]	min./max. Panel thickness [mm]	min. cavity depth [mm]	qty. per box pcs.	outer carton pcs.
WTB 8 x 16 MHD	**31086**	13	3 / 16	48	10	80
WTB 8 x 24 MHD	**31087**	13	16 / 24	54	10	80

UB - urinal fixing
Suitability: fixing urinals in concrete and masonry

type	ref.-no.	Ø drill bit [mm]	drill. Depth [mm]	min. anchorage depth [mm]	max. thickness of ceramic [mm]	qty. per box pcs.	outer carton pcs.
UB 8 x 120	**33800**	10	65	50	50	10	160

WTUB - washbasin and urinal fixing
Suitability: fixing washbasins or urinals in concrete and masonry

WTUB 10 x 140 w	**33798**	12	80	65	50	10	80
WTUB 10 x 140 chr	**33799**	12	80	65	50	10	80

WCB - toilet fixing
Suitability: fixing floor-mounted toilets in all base materials

type	ref.-no.	Ø drill bit [mm]	drill. depth [mm]	min. anchorage depthe [mm]	max. thickness of ceramic [mm]	qty. per box pcs.	outer carton pcs.
WCB 6 x 90	**32053**	8	60	50	33	10	160

SB - mirror fixing
Suitability: fixing exchangeable mirrors in concrete and masonry

type	ref.-no.	Ø drill bit [mm]	drill. depth [mm]	min. anchorage depth [mm]	qty. per box pcs.	outer carton pcs.
SB	**33797**	6	40	30	10	160

RH - plastic pipe hook
Suitability: fixing rigid and flexible pipes in concrete and natural stone, especially in connection with floor heatings

type	ref.-no.	Ø drill bit [mm]	length of pipe hook [mm]	Ø pipe [mm]	qty. per box pcs.	outer carton pcs.
RH 6 x 70	**31586**	6	70	- 25	100	8000
RH 8 x 75	**31587**	8	75	25 - 35	100	3000
RH 8 x 95	**31588**	8	95	25 - 35	100	3000
RH 8 x 110	**31589**	8	110	35 - 55	100	2000

KEW RHD - plastic twin pipe hook

RHD 6 x 70	**31583**	6	70	- 25	100	5000
RHD 8 x 75	**31584**	8	75	25 - 35	100	1900
RHD 8 x 95	**31585**	8	95	25 - 35	100	1800
RHD 8 x 110	**38133**	8	110	25 - 35	100	1800

Clip
Suitability: covering up safely pipe insulation half clamps

type	ref.-no.	qty. per box pcs.	outer carton pcs.
Clip	**31591**	100	60000

Technical Data

STS - stud screw

Suitability: fixing pipe clips and sanitary objects in combination with KEW plugs in all base materials. Without plug suitable for wood

type	ref.-no.	suitable for plugs Ø [mm]	wood thread [mm]	metric thread [mm]	drive	qty. per box pcs.
STS 6 x 60	**37124**	8	5 x 35	M 6 x 20	T15	100
STS 6 x 80	**37127**	8	5 x 45	M 6 x 30	T15	100
STS 8 x 50	**37137**	10	7 x 30	M 8 x 10	T25	100
STS 8 x 60	**33290**	10	7 x 30	M 8 x 20	T25	100
STS 8 x 80	**33291**	10	7 x 35	M 8 x 30	T25	100
STS 8 x 100	**33292**	10	7 x 45	M 8 x 40	T25	100
STS 8 x 120	**33293**	10	7 x 45	M 8 x 50	T25	100
STS 8 x 140	**37138**	10	7 x 45	M 8 x 50	T25	100
STS 8 x 160	**37139**	10	7 x 45	M 8 x 50	T25	100
STS 10 x 60	**33294**	12	9 x 35	M 10 x 20	T25	100
STS 10 x 80	**33295**	12	9 x 45	M 10 x 20	T25	100
STS 10 x 100	**33296**	12	9 x 55	M 10 x 30	T25	100
STS 10 x 120	**33297**	12	9 x 55	M 10 x 40	T25	100
STS 10 x 140	**33298**	12	9x 55	M 10 x 40	T25	75
STS 10 x 160	**37140**	12	9x 55	M 10 x 40	T25	75

LM -long hexagon nut

Suitability: extending metric threads

type	ref.-no.	qty. per box pcs.	outer carton pcs.
LM 8 x 30	**33727**	100	1600
LM 10 x 30	**33728**	100	1600

GWS - threaded stud

Suitability: various applications

GWS M 6 x 1000	**34877**	1
GWS M 8 x 1000	**33814**	1
GWS M 10 x 1000	**33815**	1
GWS M 12 x 1000	**34878**	1
GWS M 14 x 1000	**34879**	1
GWS M 16 x 1000	**34880**	1

RSP - pipe clamp "Praktic"

Suitability: fixing pipes for heating and sanitary applications to walls, floors as well as overhead

type	ref.-no.	clamping range [mm]	nom.size [inch / mm]	fixing nut thread	qty. per box pcs.
RSP 1/4"	**34738**	12 - 16	1/4" / 15	M 8	100
RSP 3/8"	**34739**	17 - 19	3/8" / 18	M 8	100
RSP 1/2"	**34740**	20 - 23	1/2" / 22	M 8	100
RSP 3/4"	**34741**	25 - 30	3/4" / 28	M 8	100
RSP 1"	**34742**	31 - 38	1" / 35	M 8	100
RSP 1 1/4"	**34743**	40 - 46	1 1/4" / 42	M 8	100
RSP 1 1/2"	**34744**	48 - 53	1 1/2" / 53	M 8	100
RSP 2" *	**34745**	60 - 64	2" / 64	M8 / M 10	50
RSP 2 1/2" *	**34746**	72 - 78	2 1/2" / 78	M8 / M 10	50
RSP 3" *	**34747**	87 - 92	3" / 92	M8 / M 10	50
RSP 4" *	**34748**	102 - 116	4" / 116	M8 / M 10	50

RSP G - pipe clamp "Praktic-Gleit"

Suitability: fixing plastic pipes for heating and sanitary applications to walls, floors as well as overhead

RSP G 1/4"	**34749**	16	1/4" / 15	M 8	100
RSP G 1/2"	**34750**	20	1/2" / 22	M 8	100
RSP G 3/4"	**34751**	25	3/4" / 28	M 8	100
RSP G 1"	**34752**	32	1" / 35	M 8	100
RSP G 1 1/4"	**34753**	40	1 1/4" / 42	M 8	100
RSP G 1 1/2"	**34754**	50	1 1/2" / 48	M 8	100

RSS - threaded pipe clamp

Suitability: fixing pipes for heating and sanitary applications to walls, floors as well as overhead

RSS 1/4"	**34755**	12 - 14	1/4" / 15	M 8	100
RSS 3/8"	**34756**	15 - 19	3/8" / 18	M 8	100
RSS 1/2"	**34757**	20 - 23	1/2" / 22	M 8	100
RSS 3/4"	**34758**	25 - 28	3/4" / 28	M 8	100
RSS 1"	**34759**	32 - 35	1" / 35	M 8	100
RSS 1 1/4"	**34760**	40 - 43	1 1/4" / 42	M 8	100
RSS 1 1/2"	**34761**	48 - 53	1 1/2" / 48	M 8	50
RSS 50	**34762**	50 - 55	- / 55	M8 / M 10	50
RSS 2"	**34763**	57 - 61	2" / 64	M8 / M 10	50
RSS 63	**34764**	63 - 67	- / 67	M8 / M 10	50
RSS 2 1/2"	**34765**	74 - 80	2 1/2" / 78	M8 / M 10	50
RSS 3"	**34767**	83 - 91	3" / 92	M8 / M 10	50
RSS 4"	**34768**	108 - 114	4" / 116	M8 / M 10	50
RSS 123	**34769**	123 - 128	- / 125	M8 / M 10	25
RSS 5"	**34770**	131 - 135	5" / 141	M8 / M 10	25
RSS 6"	**34771**	159 - 165	6" / 168	M8 / M 10	25
RSS 216	**34772**	216 - 220	- / 219	M 10	10

Heating and Sanitary Fixings

Technical Data

KGP l - bracket base plate, lengthwise
Suitability: assembling wall-mounted consoles of various lengths

type	art.-no.	ace flange size [mm]	qty. per box pcs.
KGP l 27/18	**34780**	50 x 24 x 4	1
KGP l 38/40	**34782**	75 x 33 x 4	1

KGP q - bracket base plate, crosswise

KGP q 27/18	**34779**	50 x 24 x 4	1
KGP q 38/40	**34781**	75 x 33 x 4	1

HKS - hammerhead screw
Suitability: fixing pipe clamps to consoles and channels

HKS 27/18 M 8 x 20	**34793**	50
HKS 27/18 M 8 x 25	**34794**	50
HKS 27/18 M 8 x 30	**34795**	50
HKS 27/18 M 8 x 40	**34796**	50
HKS 27/18 M 8 x 50	**34797**	50
HKS 27/18 M 8 x 80	**34798**	50
HKS 27/18 M 8 x 100	**34799**	25
HKS 27/18 M 10 x 30	**34800**	50
HKS 38/40 M 8 x 30	**34801**	50
HKS 38/40 M 8 x 50	**34802**	25
HKS 38/40 M 8 x 100	**34803**	25
HKS 38/40 M 10 x 30	**34804**	50
HKS 38/40 M 10 x 50	**34805**	25
HKS 38/40 M 10 x 100	**34806**	25

SBM - sliding nut
Suitability: fixing pipe clamps to consoles and channels with threaded elements

SBM 27/18 M 8	**34807**	100
SBM 27/18 M 10	**34808**	100
SBM 38/40 M 8	**34809**	100
SBM 38/40 M 10	**34810**	100

HK - retaining bracket
Suitability: to be attached to consoles and channels to prevent possible bending open due to overloading

type	ref.-no.	for thread	drill hole [mm]	qty. per box pcs.
HK 27/18	**34791**	M 8	9	25
HK 38/40	**34792**	M 10	11	25

SK - rail bracket
Suitability: fixing pipe systems to walls; performing fixings to floors and suspensions from ceilings

type	ref.-no.	base plate [mm]	qty. per box pcs.
SK 27/18 x 200	**34773**	120 x 40 x 4	1
SK 27/18 x 300	**34774**	120 x 40 x 4	1
SK 27/18 x 500	**34775**	120 x 40 x 4	1
SK 38/40 x 200	**34776**	120 x 40 x 6	1
SK 38/40 x 300	**34777**	120 x 40 x 6	1
SK 38/40 x 500	**34778**	120 x 40 x 6	1

MW - angle bracket
Suitability: assembling and reinforcing supporting systems in connection with channels

type	ref.-no.	angle	qty. per box pcs.
MW 27/18 - 45	**34785**	45°	1
MW 27/18 - 90	**34786**	90°	1
MW 38/40 - 45	**34788**	45°	1
MW 38/40 - 90	**34789**	90°	1

SVB - rail connector
Suitability: to connect rails/ channels and consoles

type	ref.-no.	screw size	qty. per box pcs.
SV 27/18	**34783**	M 8 x 16	1
SV 38/40	**34784**	M 10 x 20	1

Accessories

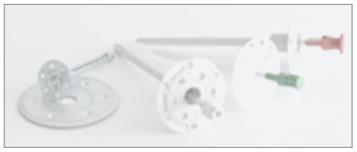

accessories

technical data

HWK - craftsman suitcase

type	ref.-no.	dimensions	Pal pcs.
HWK S	**37608**	300x199x154	208
HWK L	**37609**	410x301x278	56

EcoBox - stack box

type	ref.-no.	dimensions	outer carton pcs.
ECOBOX 111 D green	**33017**	177x114x77	40
ECOBOX 111 D blue	**33018**	177x114x77	40
ECOBOX 111 D yellow	**33019**	177x114x77	40
ECOBOX 111 D red	**30120**	177x114x77	40

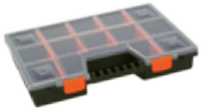

S-Box - Assortment box

type	ref.-no.	dimensions	outer carton pcs.
S-BOX S	**38138**	203x169x33	13
S-BOX M	**38139**	299x197x36	12
S-BOX L	**38140**	392x288x67	8

BOX SU K - Assortment box small

type	ref.-no.	Inhalt	outer carton pcs.
SUK-BOX 160 tlg	**37744**	50 plugSU K 6, 50 chipboard screws 4,5 x 50, 30 plug SU K 8, 30 chipboard screws 6 x 70	13
SUK/DSD S-Box 155 tlg	**38034**	35 plug SU K 6, 20 plug SU K 8, 10 plug SU K 10, 50 plug DSD S 6, 30 plug DSD S 8, 10 plug DSD S 10	13
SUK/DSD S-Box 164 tlg	**38035**	20 plug U K 6, 12 plug SU K 8, 4 plug SU K 10, 25 plug DSD S 6, 15 plug DSD S 8, 6 plug DSD S 10, 45 chipboard screws 4,5 x 50, 27 chipboard screws 6,0 x 70, 10 chipboard screws 7,0 x 80	13
SUK/DSD S-Box 148 tlg	**38040**	25 plug SU K 6, 10 plug SU K 8, 25 plug DSD S 6, 13 plug DSD S 8, 39 chipboard screws 4,5 x 50, 21 chipboard screws 6 x 70, 4round hook 3,5 x 70, 2 round hook white 4,2 x 65, 2 eye screw white 5,0 x 85, 5 angle hook 4,4 x 40, 1 drill bit Ø 6, 1 drill bit Ø 8	13

BOX SU K - Assortment box medium

SUK/DSD S-Box 300 tlg	**38042**	60 plug SU K 6, 30 plug SU K 6L, 20 plug SU K 8, 130 plug DSD S 6, 60 plug DSD S 8	12
SUK/DSD S-Box 340 tlg	**38043**	20 plug SU K 5, 30 plug SU K 6, 12 plug SU K 8, 8 plug SU K 10, 30 plug DSD S 5, 40 plug DSD S 6, 20 plug DSD S 8, 10 plug DSD S 10, 50 chipboard screws3,5 x 45, 70 chipboard screws 4,0 x 40, 32 chipboard screws 5,0 x 50, 8 chipboard screws 6,0 x 70	12
SUK/DSD S-Box 194 tlg	**38047**	40 plug SU K 6, 15 plug SU K 8, 5 plug SU K 10, 70 plug DSD S 6, 30 plug DSD S 8, 6 plug DSD S 10, 8 round hook 3,5 x 70, 4 round hook 5,0 x 85, 2 eye screw 5,0 x 85, 6 angle hook 4,4 x 40, 2 round hook white 4,2 x 65, 2 round hook white 5,4 x 80, 2 Scaffold Screw 8,0 x 80, 1 drill bit Ø6, 1 drill bit Ø 8	12

BOX SU K - Assortment box large

SUK-BOX 608 tlg	**37741**	75 plug SU K 5, 350 plug SU K 6, 30 plug SU K 6L, 100 plug SU K 8, 35 plug SU K 10, 18 plug SU K 12	8
SUK/DSD S-Box 772 tlg	**38048**	150 plug SU K 6, 70 plug SU k 8, 20 plug SU K 10, 200 plug DSD S 6, 120 plug DSD S 8, 30 plug DSD S 10, 100 chipboard screws 4,5 x 50, 50 chipboard screws 6,0 x 70, 30 chipboard screws 7,0 x 80, 1 drill bit Ø 6, 1 drill bit Ø 8	8

technical data

BOX UDD - Assortment box small

type	ref.-no.	contents	outer carton pcs.
UDD-BOX 190 pcs.	**37743**	60 plug UDD 6x36, 60 chipboard screws 4,5x50, 35 plug UDD 8x51, 35 chipboard screws 6 x 70	13
UDD-BOX 192 pcs.	**37742**	105 plug UDD 6x36, 20 plug UDD 6x51, 65 plug UDD 8x51, 1 masonry drill Ø 6, 1 masonry drill Ø 8	13

BOX UDD - Assortment kit medium

type	ref.-no.	contents	outer carton pcs.
UDD/ DSD S-BOX 275 pcs.	**38041**	55 plug UDD 6x36, 40 plug UDD 6x51, 25 plug UDD 8x51, 15 plug UDD 10x61, 80 plug DSD S 6, 40 plug DSD S 8, 20 plug DSD S 10	12

BOX UDD - Assortment box large

type	ref.-no.	contents	outer carton pcs.
UDD-BOX 800 pcs.	**37740**	90 plug UDD 5x31, 450 plug UDD 6x36, 35 plug UDD 6x51, 150 plug UDD 8x51, 50 plug UDD 10x61, 15 plug UDD 12x71, 10 plug UDD 14x75	8

electrical-BOX - Assortment box

type	ref.-no.	contents	outer carton pcs.
electrical-box 200pcs	**38039**	20 plug SU K 6, 70 cable clip NS 5-7, 30 cable clip NS 7-12, 20 cable clip NS 10-14, 20 chipboard screw ben 4x60, 40 cable tie 2,5x135	13
electrical-box 381pcs	**38045**	20 plug SU K 6, 8 plug SU K 8, 5 plug SU K 10, 100 cable clip NS 5-7, 40 cable clip NS 7-12, 25 cable clip NS 10-14, 20 chipboard screw 5x50, 8 chipboard screw 6x70, 5 chipboard screw 7x80, 50 cable tie 3,6x140, 100 cable tie 2,6x200	12

plasterboardbox - Assortment box small

type	ref.-no.	contents	outer carton pcs.
Gipskarton-BOX 120 pcs.	**38036**	8 plug KHD 10x50, 30 plug GKD, 1 Setting tool SW, 14 plug GKD M, 32 chipboard screws 4,0 x 40, 8 chipboard screws 4,0 x 60, 4 round hook 4,2 x 65, 8 angle hook white 4,4 x 40	13

plasterboardbox - Assortment box medium

type	ref.-no.	contents	outer carton pcs.
plasterboardbox 235 pcs	**38044**	12 plug KHD 10x50, 60 plug GKD, 1 Setting tool SW, 25 plug GKD M, 20 plug SP 8, 65 chipboard screws 4,0 x 40, 12 chipboard screws 4,0 x 60, 20 chipboard screws 5,0 x 50, 4 round hook 4,2 x 65, 16 angle hook white 4,4 x 40	12

plasterboardbox - Assortment box large

type	ref.-no.	contents	outer carton pcs.
plasterboardbox 462 pcs.	**37745**	20 plug KHD 10x50, 40 plug GKD, 1 Setting tool SW, 40 plug GKD M, 80 plug SU K 6, 30 plug SU K 6L, 30 plug SU K 8, 40 plug MHD 4x12, 40 plug MHD 5x12, 40 plug MHD 5x16, 1 setting tool, 80 chipboard screws 4,0 x 40, 20 chipboard screws 4,0 x 60	8

Screwbox - Assortment box medium

type	ref.-no.	contents	outer carton pcs.
Screwbox 245 pcs.	**38038**	100 chipboard screw 3x30, 50 chipboard screw 4x40, 40 chipboard screw 4,5x70, 30 chipboard screw 5x50, 25 chipboard screw 6x70	13

Notes

The Self Service Range

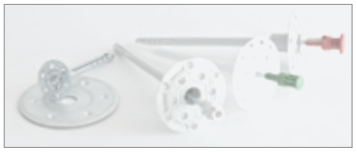

The Self Service - Range

The comprehensive range - ambitious, clear, attractive

KEW DIY-Display-Stand 2,50 m x 2,0 m and KEW Pro-Display-Stand 1,25 m x 2,00 m

DIY Fixings

The comprehensive range of DIY-suited small-packs for simple up to ambitious DIY applications. All important directions for use are clearly shown on the packages. The products are packed in blister packs, bags, folding boxes, stack boxes, and round plastic boxes.

Professional Fixings

This range addresses to the typical requirements of the professional user and includes special fixings for special applications. It comprises bulk packed products, products packed in bags and folding boxes the contents of which correspond to the needs of professional users. The modular KEW display system allows to compose a customised range of fixings.

The NEW User's Guide - The GOOD Advice

Characteristics

The new KEW guiding systems helps the end user to get along instantaneously.

General colour coding system

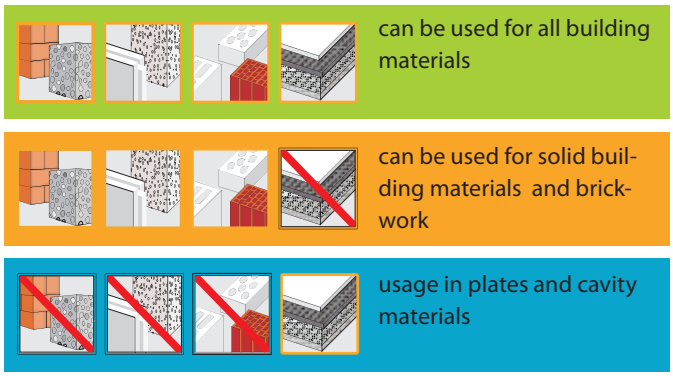

The colour coding system allows all products to be pre-selected according to an existing base material.

Ideal blister pack

Ideal visibility and relockableness are just a few out of many advantages of the new blister pack system. Easy-to-understand explanations and pictures help to promote sales. The general colour coding systems also applies for blister packs.

Sub-groups and installation sequences

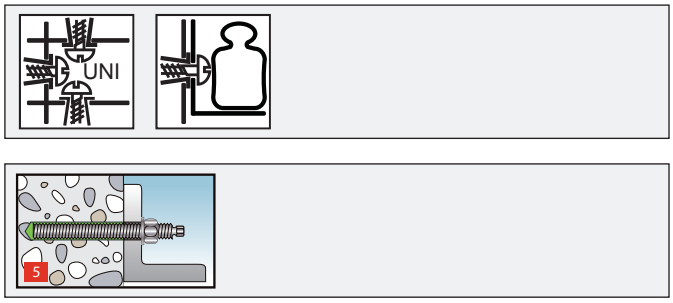

The individual products are shown installed. Characteristic features can be seen at once.

Products, installation sequences

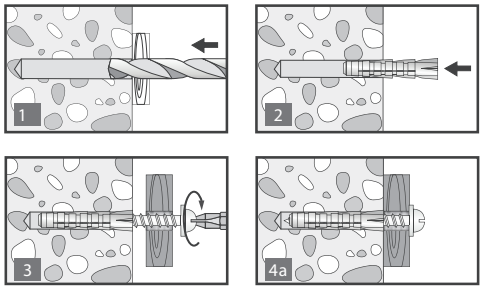

Navigation system

The general colour coding system along with easy-to-understand directions for use help to identify the product looked for. Perfect clarity - perfect compliance with all customers' needs!

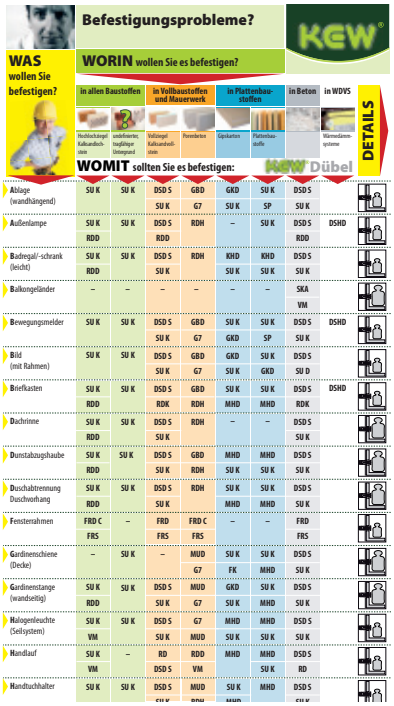

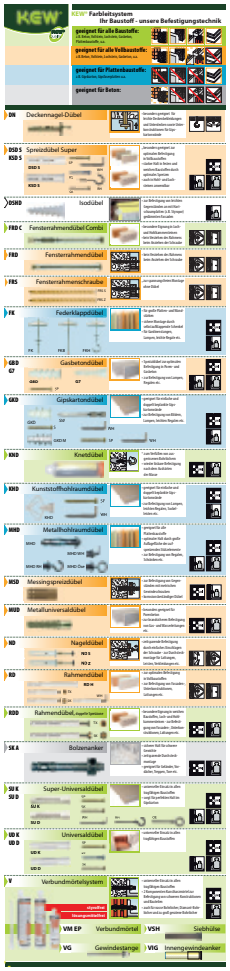

self-service range with individual tag

RDD TX - Frame Plug, extended expansion area with Torx screw and with individual tag

type	ref.-no.	qty.per box pcs.
RDD 10x120 TX E	**37418**	50
RDD 10x140 TX E	**37419**	50
RDD 10x160 TX E	**37420**	50
RDD 10x180 TX E	**37421**	50
RDD 10x200 TX E	**37422**	50
RDD 10x230 TX E	**37423**	50
RDD 10x260 TX E	**37424**	50

RDD SKS - Frame Plug, extended expansion area with hexagonal screw and integral washer and Torx screw with individual tag

type	ref.-no.	qty.per box pcs.
RDD 10x120 SKS E	**37425**	50
RDD 10x140 SKS E	**37426**	50
RDD 10x160 SKS E	**37427**	50
RDD 10x180 SKS E	**37428**	50
RDD 10x200 SKS E	**37429**	50
RDD 10x230 SKS E	**37430**	50
RDD 10x260 TX E	**37424**	50

GS - Scaffold screw with individual tag

type	ref.-no.	qty.per box pcs.
GS 12X 90 E	**37432**	25
GS 12X120 E	**37433**	25
GS 12X190 E	**37434**	25
GS 12X230 E	**37435**	25
GS 12X350 E	**37436**	25

FRD M - Window frame plug with individual tag

type	ref.-no.	qty.per box pcs.
FRD 10x112 E	**37459**	100
FRD 10x132 E	**37460**	100
FRD 10x152 E	**37461**	100
FRD 10x182 E	**37462**	100
FRD 10x202 E	**37463**	100

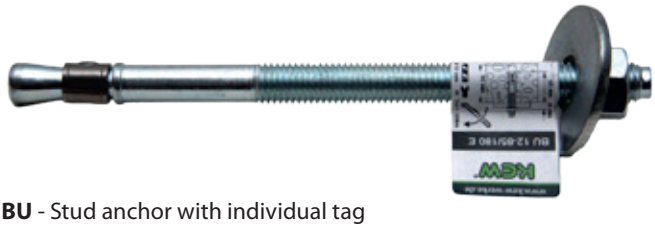

BU - Stud anchor with individual tag

type	ref.-no.	qty.per box pcs.
BU 12-85/180 E	**37450**	25
BU 12-105/200 E	**37451**	25
BU 12-145/240 E	**37452**	25
BU 12-160/255 E	**37453**	20
BU 12-190/285 E	**37454**	20
BU 16-100/220 E	**37455**	10
BU 16-130/250 E	**37456**	10
BU 16-165/285 E	**37457**	10

S-KA - Stud anchor made of galvanized steel with individual tag

type	ref.-no.	qty.per box pcs.
S-KA 10/10 E	**36828**	50
S-KA 10/30 E	**36829**	25
S-KA 10/55 E	**36830**	25
S-KA 10/80 E	**36831**	25
S-KA 12/5 E	**36832**	20
S-KA 12/20 E	**36833**	25
S-KA 12/35 E	**36834**	25
S-KA 12/65 E	**36835**	25
S-KA 12/105 E	**36836**	25
S-KA 16/20 E	**36837**	10

self-service range with individual tag

S-KAH - Stud anchor made of stainless steel, A4 with individual tag

type	ref.-no.	qty.per box pcs.
S-KAH 10/10 A4 E	**36861**	50
S-KAH 12/5 A4 E	**36862**	25
S-KAH 12/20 A4 E	**36863**	25

RS - pipe clamp with individual tag

type	ref.-no.	qty.per box pcs.
RS PRAKTIC 3/8" E	**37442**	100
RS PRAKTIC 1/2" E	**37443**	100
RS PRAKTIC 3/4" E	**37444**	100
RS PRAKTIC 1" E	**37445**	100
RS PRAKTIC 1 1/4" E	**37446**	100
RS PRAKTIC 1 1/2" E	**37447**	100
RS PRAKTIC 2" E	**37448**	50
RS PRAKTIC 2 1/2" E	**37449**	50

universal plug - SU D

Type	Art.No.	Package contents	pcs./UK
Blister card			
SU D 5	**37109**	20 x SU D Ø 5	9
SU D 6	**35957**	18 x SU D Ø 6	9
SU D 6 L	**35958**	16 x SU D Ø 6 long	9
SU D 8	**35959**	12 x SU D Ø 8	9
SU D 10	**35960**	6 x SU D Ø 10	9
SU D 12	**37110**	4 x SU D Ø 12	9
SU D 14	**37111**	3 x SU D Ø 14	9

universal plug

universal plug with collar - SU K

Type	Art.No.	Package contents	pcs./UK
Blister card			
SU K 5	**37112**	20 x SU K Ø 5	9
SU K 6	**35961**	18 x SU K Ø 6	9
SU K 6 L	**35962**	16 x SU K Ø 6 long	9
SU K 8	**35963**	12 x SU K Ø 8	9
SU K 10	**35964**	6 x SU K Ø 10	9
SU K 12	**37113**	4 x SU K Ø 12	9
SU K 14	**37114**	3 x SU K Ø 14	9

universal plug with colla

universal plug with chipboard screw - SU D SP

Type	Art.No.	Package contents	pcs./UK
Blister card			
SU D 5 SP	**37115**	15 x SU D Ø 5 / 15 x Chipboard screw 3,5 x 45	9
SU D 6 SP	**35965**	10 x SU D Ø 6 / 10 x Chipboard screw 4,5 x 50	9
SU D 6 L SP	**35966**	8 x SU D Ø 6 / 8 x Chipboard screw 4,5 x 70	9
SU D 8 SP	**35967**	6 x SU D Ø 8 / 6 x Chipboard screw 6,0 x 70	9

universal plug with chipboard screw

universal plug with collar and chipboard screw - SU KSP

Type	**Art.No.**	Package contents	pcs./UK
Blister card			
SU K 5 SP	**37116**	15 x SU K Ø 5 / 15 x Chipboard screw 3,5 x 45	9
SU K 6 SP	**35968**	10 x SU K Ø 6 / 10 x Chipboard screw 4,5 x 50	9
SU K 6L SP	**35969**	8 x SU K Ø 6 / 8 x Chipboard screw 4,5 x 70	9
SU K 8 SP	**35970**	6 x SU K Ø 8 / 6 x Chipboard screw 6,0 x 70	9

universal plug with collar and chipboard screw

universal plug with hexagon-head screw - SU D SK

Type	Art.No.	Package contents	pcs./UK
Blister card			
SU D 10 SK	**35971**	4 x SU D Ø 10 / 4 x Hexagon-head screw 8,0 x 80	9
SU D 12 SK	**37117**	2 x SU D Ø 12 / 2 x Hexagon-head screw 8,0 x 90	9
SU D 14 SK	**37119**	2 x SU D Ø 14 / 2 x Hexagon-head screw 10,0 x 100	9

universal plug with collar and hexagon-head screw

universal plug with collar and hexagon-head screw - SU K SK

Type	**Art.No.**	Package contents	pcs./UK
Blister card			
SU K 10 SK	**35972**	4 x SU K Ø 10 / 4 x Hexagon-head screw 8,0 x 80	9
SU K 12 SK	**37118**	2 x SU K Ø 12 / 2 x Hexagon-head screw 8,0 x 90	9
SU K 14 SK	**37120**	2 x SU K Ø 14 / 2 x Hexagon-head screw 10,0 x 100	9

universal plug with collar and hexagon-head screw

self-service range - for all building materials

universal plug with collar and round hook - SU K RH

Type	Art.No.	Package contents	pcs./UK
Blister card			
SU K 6 RH	**33883**	4 x SU K Ø 6 / 4 x round hook 4,4 x 67	9
SU K 8 RH	**33899**	4 x SU K Ø 8 / 4 x round hook 4,9 x 84	9
SU K 10 RH	**33900**	2 x SU K Ø 10 / 2 x round hook 6,8 x 97	9

universal plug with collar and round hook

universal plug with collar and angle hook - SU K WH

Type	Art.No.	Package contents	pcs./UK
Blister card			
SU K 6 WH	**33881**	4 x SU K Ø 6 / 4 x angle hook 4,4 x 51	9
SU K 8 WH	**33898**	4 x SU K Ø 8 / 4 x angle hook 4,9 x 70	9
SU K 10 WH	**33882**	2 x SU K Ø 10 / 2 x angle hook 6,8 x 79	9

universal plug with collar and angle hook

universal plug with collar and angle hook, round hook and eye screw - SU K WHB /SU K RHB / SU K OEB

Bezeichn.	Art.No.	Package contents	pcs./UK
Blister card			
SU K 8 WHB	**33884**	2 x SU K Ø 8 / 2 x angle hook 4,9 x 70 m, nylon coated	9
SU K 8 RHB	**33901**	2 x SU K Ø 8 / 2 x round hook 4,9 x 84 m, nylon coated	9
SU K 8 OEB	**33885**	2 x SU K Ø 8 / 2 x eye screw 4,9 x 84 m, nylon coated	9

universal plug with collar and angle hook, round hook and eye screw

universal plug with collar - UKD

Type	Art.No.	Package contents	pcs./UK
Blister card			
UKD 5 x 32	**31140**	20 x UKD Ø 5 x 31	9
UKD 6 x 37	**31142**	18 x UKD Ø 6 x 37	9
UKD 6 x 52	**35848**	16 x UKD Ø 6 x 52	9
UKD 8 x 52	**31148**	12 x UKD Ø 8 x 52	9
UKD 10 x 62	**31150**	6 x UKD Ø 10 x 62	9
UKD 12 x 72	**31152**	4 x UKD Ø 12 x 72	9
UKD 14 x 76	**31154**	3 x UKD Ø 14 x 76	9

universal plug with collar

universal plug with collar and chipboard screw - UKD SP

Type.	Art.No.	Package contents	pcs./UK
Blister card			
UKD 5 x 32 SP	**32621**	15 x UKD Ø 5x32 / 15 x chipboard screw 3,5x45	9
UKD 6 x 37 SP	**32622**	10 x UKD Ø 6x37 / 10 x chipboard screw 4,5x50	9
UKD 6 x 52 SP	**35850**	10 x UKD Ø 6x52 / 10 x chipboard screw 4,5x70	9
UKD 8 x 52 SP	**32625**	6 x UKD Ø 8x52 / 6 x chipboard screw 6,0x70	9
UKD 10 x 62 SP	**32626**	4 x UKD Ø 10x62 / 4 x chipboard screw 7,0x80	9

universal plug with collar and chipboard screw

self-service range - for all building materials

universal plug with collar and hexagon-head screw - UKD SK

Type	Art.No.	Package contents	pcs./UK
Blister card			
UKD 12 x 72 SK	**32641**	2 x UKD Ø 12 x 72 / 2 x hexagon-head screw 8,0 x 90	9
UKD 14 x 76 SK	**32642**	2 x UKD Ø 14 x 76 / 2 x hexagon-head screw 10,0 x 100	9

universal plug with collar and hexagon-head screw

universal plug through with wood screw - UDD KS

Type	Art.No.	Package contents	pcs./UK
Blister card			
UDD 5 x 31 KS	**32627**	15 x UDD Ø 5 x 31 / 15 x Wood screw 3,0 x 40	9
UDD 6 x 36 KS	**32628**	10 x UDD Ø 6 x 36 / 10 x Wood screw 4,0 x 50	9
UDD 8 x 51 KS	**32631**	6 x UDD Ø 8 x 51 / 6 x Wood screw 5,0 x 70	9
UDD 10 x 61 KS	**32632**	4 x UDD Ø 10 x 61 / 4 x Wood screw 7,0 x 80	9

universal plug through with wood screw

universal plug with collar and wood screw - UKD KS

Type	Art.No.	Package contents	pcs./UK
Blister card			
UKD 5 x 32 KS	**32633**	15 x UDD Ø 5 x 32 / 15 x Wood screw 3,0 x 40	9
UKD 6 x 37 KS	**32634**	10 x UDD Ø 6 x 37 / 10 x Wood screw 4,0 x 50	9
UKD 8 x 52 KS	**32637**	6 x UDD Ø 8 x 52 / 6 x Wood screw 5,0 x 70	9
UKD 10 x 62 KS	**32638**	4 x UDD Ø 10 x 62 / 4 x Wood screw 7,0 x 80	9

universal plug with collar and wood screw

WC and sanitary fixing - WCB

Type	Art.No.	Package contents	pcs./UK
Blister card			
WCB 6 x 90 SK	**31550**	2 x UDD 8x51, 2 x snap-fit sleeve WCB, 2 x brass hexagon head screw 6x90, 2 x cover cap WCB white, 2 x cover cap WCB bahamabeige	9

WC and sanitary fixing

urinal fixing - UB

Type	Art.No.	St. x Inhalt	pcs./UK
Poly bag blister			
UB 8 x 120 STS weiß	**33935**	2 x DSD S Ø 10, 2 x stud screw M 8x120, 2 x nylon washer M 8, 2 x washer M 8, 2 x hexagonal nut M 8, 2 x cover cap URI white	12

urinal fixing

expansion socket - SP

Type	Art.No.	Inhalt	pcs./UK
Blister card			
SP 6	**30703**	30 x SP Ø 6	9
SP 7	**30704**	25 x SP Ø 7	9
SP 8	**30705**	25 x SP Ø 8	9

expansion socket

self-service range - for all building materials

expansion socket with chipboard screw - SP S

Type	Art.No.	Package contents	pcs./UK
Blister card			
SP 6 S	**36131**	10 x SP Ø 6 / 10 x Chipboard screw 3 x 30	9
SP 7 S	**36132**	10 x SP Ø 6 / 10 x Chipboard screw 4 x 40	9
SP 8 S	**36133**	10 x SP Ø 6 / 10 x Chipboard screw 5 x 50	9

expansion socket with chipboard screw

Frame Plug, extended expansion area with Torx screw and individual tag - RDD TX

type	ref.-no.	qty. per box pcs.
RDD 10x120 TX E	**37418**	50
RDD 10x140 TX E	**37419**	50
RDD 10x160 TX E	**37420**	50
RDD 10x180 TX E	**37421**	50
RDD 10x200 TX E	**37422**	50
RDD 10x230 TX E	**37423**	50
RDD 10x260 TX E	**37424**	50

Frame Plug, extended expansion area with hexagonal screw and integral washer and Torx screw with individual tag - RDD SKS

type	ref.-no.	qty. per box pcs.
RDD 10x120 SKS E	**37425**	50
RDD 10x140 SKS E	**37426**	50
RDD 10x160 SKS E	**37427**	50
RDD 10x180 SKS E	**37428**	50
RDD 10x200 SKS E	**37429**	50
RDD 10x230 SKS E	**37430**	50
RDD 10x260 TX E	**37424**	50

frame fixing with hexagon-head safety screw - RDD SK

Type	Art.No.	Package contents	pcs./UK
Blister card			
RDD 8 x 100 SK	**36134**	4 x RDD Ø 8 x 100 / 4 x Hexagon-head safety screw 6,0 x 105	9
Poly bag blister			
RDD 8 x 120 SK	**36135**	4 x RDD Ø 8 x 120 / 4 x Hexagon-head safety screw 6,0 x 125	15
RDD 10 x 100 SK	**33952**	4 x RDD Ø 10 x 100 / 4 x Hexagon-head safety screw 7,0 x 105	20
RDD 10 x 120 SK	**33953**	4 x RDD Ø 10 x 120 / 4 x Hexagon-head safety screw 7,0 x 125	20
RDD 10 x 140 SK	**33954**	4 x RDD Ø 10 x 140 / 4 x Hexagon-head safety screw 7,0 x 145	15
RDD 10 x 160 SK	**33955**	4 x RDD Ø 10 x 160 / 4 x Hexagon-head safety screw 7,0 x 165	15

shorter additional length RD 8x80 SK - Art.No. 36163 and RD 10x80 SK - Art.No. 36146, siehe S. 108

frame fixing with hexagon-head safety screw

frame fixing with countersunk-head safety screw - RDD TX

zinc plated countersunk-head safety screw for torx bit size 30 for Ø 8 and 40 for Ø 10

Type	Art.No.	Package contents	pcs./UK
Blister card			
RDD 8 x 100 TX	**36136**	4 x RDD Ø 8 x 100 / 4 x countersunk-head safety screw TORX 6,0 x 105	9
Poly bag blister			
RDD 8 x 120 TX	**36178**	4 x RDD Ø 8 x 120 / 4 x countersunk-head safety screw TORX 6,0 x 125	15
RDD 10 x 100 TX	**33956**	4 x RDD Ø 10 x 100 / 4 x countersunk-head safety screw TORX 7,0 x 105	20
RDD 10 x 120 TX	**33957**	4 x RDD Ø 10 x 120 / 4 x countersunk-head safety screw TORX 7,0 x 125	20
RDD 10 x 140 TX	**33958**	4 x RDD Ø 10 x 140 / 4 x countersunk-head safety screw TORX 7,0 x 145	15
RDD 10 x 160 TX	**33959**	4 x RDD Ø 10 x 160 / 4 x countersunk-head safety screw TORX 7,0 x 165	15

shorter additional length RD 8x80 TX - Art.No. 36164 and RD 10x80 TX - Art.No. 36147, siehe S. 108

frame fixing with countersunk-head safety screw

self-service range - for all building materials

window frame fixing - FRD CM

Type	Art.No.	Package contents	pcs./UK
Poly bag blister			
FRD CM 10 x 112 *	**34129**	6 x FRD CM Ø 10 x 112 / 6 x cover cap white, 6 x cover cap dark brown	20
FRD CM 10 x 132 *	**34130**	6 x FRD CM Ø 10 x 132 / 6 x cover cap white, 6 x cover cap dark brown	20
FRD CM 10 x 152 *	**34131**	6 x FRD CM Ø 10 x 152 / 6 x cover cap white, 6 x cover cap dark brown	15
FRD CM 10 x 182 *	**34132**	6 x FRD CM Ø 10 x 182 / 6 x cover cap white, 6 x cover cap dark brown	15

* available in poly bag without blister as well

window frame fixing

Scaffold screw with individual tag - GS

type	ref.-no.	qty. per box pcs.
GS 12X 90 E	**37432**	25
GS 12X120 E	**37433**	25
GS 12X190 E	**37434**	25
GS 12X230 E	**37435**	25
GS 12X350 E	**37436**	25

scaffold anchoring - GS

Type	Art.No.	Package contents	pcs./UK
Poly bag blister			
GS 8 x 80	**36140**	2 x GS Ø 8 x 80	

scaffold anchoring

injection mortar - VM

Type	Art.No.	Package contents	pcs./UK
Poly bag blister			
VM 150	**33830**	1 x cartridge Kartusche 150ml / 2 x static mixer	4

injection mortar

internally threaded sleeve - VIG

Type	Art.No.	Package contents	pcs./UK
Blister card			
VIG M 8	**36159**	4 x VIG M 8	9
VIG M 10	**36160**	4 x VIG M 10	9

internally threaded sleeve

self-service range - for all building materials

injection anchor sleeve, plastic - VSH

Type	Art.No.	Package contents	pcs./UK
Blister card			
VSH 12 x 50	**33820**	4 x VSH Ø 12 x 50	9
Poly bag blister			
VSH 15 x 85	**33821**	4 x VSH Ø 15 x 85	15

injection anchor sleeve

wash basin fixing set for injection system - WTB VSH

Type	Art.No.	Package contents	pcs./UK
Poly bag blister			
WTB 10 x 140 VSH	**36176**	2 x threaded stud M 10x140 / 2 x anchor sleeve plastic 15x85 / 2 x flanged nut M 10 / 2 x excenter nylon flange bush M 10 / 2 x washer M 10	15

wash basin fixing set for injection system

threaded stud - VG

Type	Art.No.	Package contents	pcs./UK
Blister card			
VG M 6 x 100	**36138**	4 x VG M 6 x 100	9
VG M 8 x 110	**36157**	4 x VG M 8 x 110	9
VG M 10 x 110	**36158**	4 x VG M 10 x 110	9
Poly bag blister			
VG M 12 x 115	**36177**	4 x VG M 12 x 115	15

threaded stud

Resin fixing - KND

Type	Art.No.	Package contents	pcs./UK
Blister card			
KND 40	**36139**	resin 40g	9

Resin fixing

self-service range - or solid materials and masonry

expansion plug push through - DSD S

Type	Art.No.	Package contents	pcs./UK
Blister card			
DSD S 5	**30690**	25 x DSD S Ø 5	9
DSD S 6	**30691**	15 x DSD S Ø 6	9
DSD S 7	**30692**	12 x DSD S Ø 7	9
DSD S 8	**30693**	10 x DSD S Ø 8	9
DSD S 10	**30694**	5 x DSD S Ø 10	9
DSD S 12	**30700**	6 x DSD S Ø 12	9
DSD S 14	**30701**	4 x DSD S Ø 14	9
Blister card great packaging			
DSD S 5 G	**30695**	50 x DSD S Ø 5	9
DSD S 6 G	**30696**	30 x DSD S Ø 6	9
DSD S 7 G	**30697**	25 x DSD S Ø 7	9
DSD S 8 G	**30698**	20 x DSD S Ø 8	9
DSD S 10 G	**30699**	10 x DSD S Ø 10	9

expansion plug
push through

expansion plug with collar - KSD S

Type	Art.No.	Package contents	pcs./UK
Blister card			
KSD S 5	**30685**	25 x KSD S Ø 5	9
KSD S 6	**30686**	15 x KSD S Ø 6	9
KSD S 7	**30687**	12 x KSD S Ø 7	9
KSD S 8	**30688**	10 x KSD S Ø 8	9
KSD S 10	**30689**	5 x KSD S Ø 10	9

expansion plug
with collar

expansion plug push through with chipboard screw - DSD S SP

Type	Art.No.	Package contents	pcs./UK
Blister card			
DSD S 5 SP	**30710**	20 x DSD S Ø 5 / 20 x Chipboard screw n 3,0 x 30	9
DSD S 6 SP	**30711**	12 x DSD S Ø 6 / 12 x Chipboard screw n 4,0 x 40	9
DSD S 8 SP	**30712**	8 x DSD S Ø 8 / 8 x Chipboard screw n 5,0 x 50	9

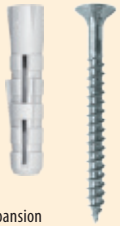

expansion
plug push through
with chipboard screw

expansion plug with collar and chipboard screw - KSD S SP

Type	Art.No.	Package contents	pcs./UK
Blister card			
KSD S 5 SP	**30713**	20 x DSD S Ø 5 / 20 x Chipboard screw n 3,0 x 30	9
KSD S 6 SP	**30714**	12 x KSD S Ø 6 / 12 x Chipboard screw n 4,0 x 40	9
KSD S 8 SP	**30715**	8 x DSD S Ø 8 / 8 x Chipboard screw n 5,0 x 50	9

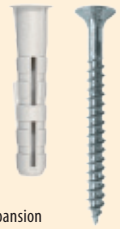

expansion
plug with collar
and chipboard screw

expansion plug push through with wood screw - DSD S KS

Type	Art.No.	Package contents	pcs./UK
Blister card			
DSD S 5 KS	**30716**	25 x DSD S Ø 5 / 25 x Wood screw 3,0 x 30	9
DSD S 6 KS	**30717**	15 x DSD S Ø 6 / 15 x Wood screw 4,0 x 40	9
DSD S 7 KS	**30718**	12 x DSD S Ø 7 / 12 x Wood screw 4,5 x 40	9
DSD S 8 KS	**30719**	10 x DSD S Ø 8 / 10 x Wood screw 5,0 x 50	9
DSD S 10 KS	**30720**	5 x DSD S Ø 10 / 5 x Wood screw 6,0 x 60	9

expansion
plug push through
with wood screw

self-service range - or solid materials and masonry

expansion plug with collar and wood screw - KSD S KS

Type	Art.No.	Package contents	pcs./UK
Blister card			
KSD S 5 KS	**30721**	25 x DSD S Ø 5 / 25 x Wood screw 6,0 x 60	9
KSD S 6 KS	**30722**	15 x KSD S Ø 6 / 15 x Wood screw 4,0 x 40	9
KSD S 7 KS	**30723**	12 x KSD S Ø 7 / 12 x Wood screw 4,5 x 40	9
KSD S 8 KS	**30724**	10 x KSD S Ø 8 / 10 x wood screw 5,0 x 50	9
KSD S 10 KS	**30725**	5 x KSD S Ø 10 / 5 x Wood screw 6,0 x 60	9

expansion plug with collar and wood screw

expansion plug push through with hexagon-head screw - DSD S SK

Type	Art.No.	Package contents	pcs./UK
Blister card			
DSD S 10 SK	**30748**	5 x DSD S Ø 10 / 5 x hexagon-head screw 6,0 x 70	9
DSD S 12 SK	**30749**	3 x DSD S Ø 12 / 3 x hexagon-head screw 8,0 x 80	9
DSD S 14 SK	**30750**	2 x DSD S Ø 14 / 2 x hexagon-head screw 10,0 x 90	9

expansion plug push through with hexagon-head screw

expansion plug with collar and hexagon-head screw - KSD S SK

Type	Art.No.	Package contents	pcs./UK
Blister card			
KSD S 10 SK	**30747**	5 x KSD S Ø 10 / 5 x hexagon-head screw 6,0 x 70	9

expansion plug with collar and hexagon-head screw

expansion plug push through with chipboard screw and cover cap - DSD S SPA

Type	Art.No.	Package contents	pcs./UK
Blister card			
DSD S 8 SPA	**30741**	8 x DSD S Ø 8 / 8 x Chipboard screw n 5 x 50 / 8 xcover cap white, dark brown, beige	9

expansion plug push through with chipboard screw and cover cap

expansion plug push through with round hook - DSD S RH

Type	Art.No.	Package contents	pcs./UK
Blister card			
DSD S 10 RH	**31540**	2 x DSD S Ø 10 / 2 x round hook 7 x 100	9

expansion plug push through with round hook

expansion plug push through with angle hook - DSD S WH

Type	Art.No.	Package contents	pcs./UK
Blister card			
DSD S 6 WH	**31542**	8 x DSD S Ø 6 / 8 x angle hook 4,4 x 40	9

expansion plug push through with angle hook

self-service range - or solid materials and masonry

expansion plug push through with round hook, white nylon coated - DSD S RK

Type	Art.No.	Package contents	pcs./UK
Blister card			
DSD S 6 RK	**33886**	4 x DSD S Ø 6 / 4 x round hook 4,2 x 65, white nylon coated	9
DSD S 8 RK	**33887**	2 x DSD S Ø 8 / 2 x round hook 5,4 x 80, white nylon coated	9
DSD S 10 RK	**33888**	2 x DSD S Ø 10 / 2 x round hook 7 x 106, white nylon coated	9

expansion plug push through with round hook, white nylon coated

wash basin fixing - WTB STS

Type	Art.No.	Package contents	pcs./UK
Poly bag blister			
WTB 10 x 120 STS	**30772**	2 x DSD S Ø 12, 2 x stud screw M 10x120, 2 x excenter nylon flange bush M 10, 2 x washer M 10, 2 x hexagonal nut M 10	12
WTB 10 x 140 STS	**30773**	2 x DSD S Ø 12, 2 x stud screw M 10x140, 2 x excenter nylon flange bush M 10, 2 x washer M 10, 2 x hexagonal nut M 10	12

wash basin fixing

wash basin and urinal fixing - WTUB

Type	Art.No.	Package contents	pcs./UK
Poly bag blister			
WTUB 10 x 140 w	**33961**	2 x DSD S Ø 12, 2 x stud screw M 10x140, 2 x flange bush M 10, 2 x washer M 10, 2 x hexagonal nut M 10, 2 x cover cap WTUB white	12
WTUB 10 x 140 cr	**33962**	2 x DSD S Ø 12, 2 x stud screw M 10x140, 2 x flange bush M 10, 2 x washer M 10, 2 x hexagonal nut M 10, 2 x cover cap WTUB chromate	12

wash basin and urinal fixing

mirror fixing - SB

Type	Art.No.	Package contents	pcs./UK
Blister card			
SB	**33934**	4 x DSD S Ø 6, 4 x pozi screw 4,0 x 40, 2 x mirror holder with spring, 2 x mirror holder without spring	9

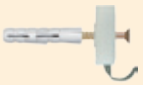

mirror fixing

frame fixing - RDH

Type	Art.No.	Package contents	pcs./UK
Blister card			
RDH 6 x 60	**33774**	15 x RDH Ø 6 x 60	9
RDH 8 x 60	**33775**	10 x RDH Ø 8 x 60	9
RDH 8 x 80	**33776**	10 x RDH Ø 8 x 80	9

frame fixing

frame fixing with contersunk-head wood screw - RD S

Type	Art.No.	Package contents	pcs./UK
Blister card			
RD 6 x 60 S	**33771**	8 x RD Ø 6 x 60 / 8 x countersunk-head wood screw 4,5 x 65	9
RD 8 x 60 S	**33772**	6 x RD Ø 8 x 60 / 6 x countersunk-head wood screw 6,0 x 65	9
RD 8 x 80 S	**33773**	5 x RD Ø 8 x 80 / 5 x countersunk-head wood screw 6,0 x 85	9
Poly bag blister			
RD 8 x 100 S	**34326**	4 x RD Ø 8 x 100 / 4 x countersunk-head wood screw 6,0 x 105	25

frame fixing + contersunk-head wood screw

self-service range - or solid materials and masonry

frame fixing with contersunk-head wood screw - RD S

Type	Art.No.	Package contents	pcs./UK
Poly bag blister			
RD 8 x 120 S	**34327**	4 x RD Ø 8 x 120 / 4 x countersunk-head wood screw 6,0 x 125	20
RD 10 x 100 S *	**34328**	4 x RD Ø 10 x 100 / 4 x countersunk-head wood screw 7,0 x 105	25
RD 10 x 120 S *	**34329**	4 x RD Ø 10 x 120 / 4 x countersunk-head wood screw 7,0 x 125	20
RD 10 x 140 S *	**34330**	4 x RD Ø 10 x 140 / 4 x countersunk-head wood screw 7,0 x 145	20

* available in poly bag without blister as well

frame fixing + contersunk-head wood screw

frame fixing with countersunk-head safety screw - RD TX

zinc plated countersunk-head safety screw for torx bit size 30 for Ø 8 and 40 for Ø 10

Type	Art.No.	Package contents	pcs./UK
Blister card			
RD 8 x 80 TX	**36164**	4 x RD Ø 8 x 80 / 4 x countersunk-head safety screw TORX 6,0 x 85	9
RD 10 x 80 TX	**36147**	4 x RD Ø 10 x 80 / 4 x countersunk-head safety screw TORX 7,0 x 85	9

frame fixing + countersunk-head safety screw

frame fixing with hexagon-head safety screw - RD SK

Type	Art.No.	Package contents	pcs./UK
Blister card			
RD 8 x 80 SK	**36163**	4 x RD Ø 8 x 80 / 4 x Hexagon-head safety screw 6,0 x 85	9
RD 10 x 80 SK	**36146**	4 x RD Ø 10 x 80 / 4 x Hexagon-head safety screw 7,0 x 85	9

frame fixing with hexagon-head safety screw

frame fixing with angle hook - RD WH

Type	Art.No.	Package contents	pcs./UK
Blister card			
RD 8 x 60 WH	**33878**	2 x RD Ø 8 x 60 / 2 x angle hook 5,8 x 80	9
RD 8 x 80 WH	**33879**	2 x RD Ø 8 x 80 / 2 x angle hook 5,8 x 100	9
Poly bag blister			
RD 10 x 100 WH	**33880**	2 x RD Ø 10 x 100 / 2 x angle hook 7,0 x 125	20

frame fixing with angle hook

nail plug - ND S

Type	Art.No.	Package contents	pcs./UK
Blister card			
ND 5 x 30 S	**30731**	20 x ND S Ø 5 x 30 / 20 x nail 3,5 x 35, pre assambled	9
ND 5 x 40 S	**30732**	20 x ND S Ø 5 x 40 / 20 x nail 3,5 x 45, pre assambled	9
ND 6 x 40 S	**30734**	15 x ND S Ø 6 x 40 / 15 x nail 4 x 45, pre assambled	9
ND 6 x 60 S	**30735**	15 x ND S Ø 6 x 60 / 15 x nail 4 x 65, pre assambled	9
ND 6 x 80 S	**30736**	10 x ND S Ø 6 x 80 / 10 x nail 4 x 85, pre assambled	9
ND 8 x 80 S	**33779**	8 x ND S Ø 8 x 80 / 8 x nail 5 x 85, pre assambled	9
Poly bag blister			
ND 8 x 100 S	**34331**	8 x ND S Ø 8 x 100 / 8 x nail 5 x 105, pre assambled	14
ND 8 x 120 S	**34332**	6 x ND S Ø 8 x 120 / 6 x nail 5 x 125, pre assambled	14
ND 8 x 140 S	**34333**	6 x ND S Ø 8 x 140 / 6 x nail 5 x 145, pre assambled	14

nail plug

self-service range - or solid materials and masonry

Window frame plug with individual tag - FRD M

type	ref.-no.	qty.per box pcs.
FRD 10x112 E	**37459**	100
FRD 10x132 E	**37460**	100
FRD 10x152 E	**37461**	100
FRD 10x182 E	**37462**	100
FRD 10x202 E	**37463**	100

Window frame plug

window frame fixing - FRD M

Type	Art.No.	Package contents	pcs./UK
Poly bag blister			
FRD M 8 x 92 *	**30761**	6 x FRD M Ø 8 x 92 / 6 x cover cap white / 6 x cover cap dark brown	24
FRD M 8 x 132 *	**30762**	6 x FRD M Ø 8 x 132 / 6 x cover cap white / 6 x cover cap dark brown	24
FRD M 10 x 112 *	**30764**	6 x FRD M Ø 10 x 112 / 6 x cover cap white / 6 x cover cap dark brown	18
FRD M 10 x 132 *	**30763**	6 x FRD M Ø 10 x 132 / 6 x cover cap white / 6 x cover cap dark brown	18
FRD M 10 x 152 *	**30765**	6 x FRD M Ø 10 x 152 / 6 x cover cap white / 6 x cover cap dark brown	14
FRD M 10 x 182 *	**31500**	6 x FRD M Ø 10 x 182 / 6 x cover cap white / 6 x cover cap dark brown	14

* available in poly bag without blister as well

window frame fixing

window frame screw countersunk head - FRS

Type	Art.No.	Package contents	pcs./UK
Blister card			
FRS 7,5 x 72 S	**36166**	6 x FRS Ø 7,5 x 72 S / 6 x cover cap white / 6 x cover cap dark brown	9
FRS 7,5 x 92 S	**36167**	6 x FRS Ø 7,5 x 92 S / 6 x cover cap white / 6 x cover cap dark brown	9
Poly bag blister			
FRS 7,5 x 112 S	**36168**	6 x FRS Ø 7,5 x 112 S / 6 x cover cap white / 6 x cover cap dark brown	15
FRS 7,5 x 132 S	**36169**	6 x FRS Ø 7,5 x 132 S / 6 x cover cap white / 6 x cover cap dark brown	15
FRS 7,5 x 152 S	**36170**	6 x FRS Ø 7,5 x 152 S / 6 x cover cap white / 6 x cover cap dark brown	15
FRS 7,5 x 182 S	**36171**	6 x FRS Ø 7,5 x 182 S / 6 x cover cap white / 6 x cover cap dark brown	15

window frame
screw countersunk head

adjusting wedge - BMK

Type	Art.No.	Package contents	pcs./UK
Poly bag blister			
BMK 6	**23070**	10 x BMK 6	17
BMK 9	**23140**	6 x BMK 9	15

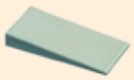

adjusting wedge

spacer unit - ASH

Type	Art.No.	Package contents	pcs./UK
Poly bag blister			
ASH 3	**36464**	15 x ASH 3	15
ASH 5	**36465**	9 x ASH 5	15
ASH 8	**36466**	6 x ASH 8	15

spacer unit

self-service range - or solid materials and masonry

brass anchor - MSD

Type	Art.No.	Package contents	pcs./UK
Blister card			
MSD M 5	**36162**	7 x MSD M 5	9
MSD M 6	**35377**	5 x MSD M 6	9
MSD M 8	**35378**	3 x MSD M 8	9
MSD M 10	**35379**	2 x MSD M 10	9

brass anchor

aircrete plug - G7

Type	Art.No.	Package contents	pcs./UK
Blister card			
G7	**36137**	10 x G 7	9

aircrete plug

aircrete plug with setting tool - GBD SW
aircrete plug with setting tool and chipboard screw - GBD SWS

Type	Art.No.	Package contents	pcs./UK
Blister card			
GBD SW	**32601**	4 x GBD / 1 x setting tool	9
GBD SWS	**32602**	4 x GBD / 1 x setting tool / 4 x Chipboard screw n 4,5 x 70	9

aircrete plug +
setting tool + chipboard screw

metal universal plug - MUD

Type	Art.No.	Package contents	pcs./UK
Blister card			
MUD 5 x 30	**32610**	14 x MUD 5 x 30	9
MUD 6 x 32	**32611**	14 x MUD 6 x 32	9
MUD 8 x 38	**32612**	12 x MUD 8 x 38	9
MUD 8 x 60	**32613**	10 x MUD 8 x 60	9
MUD 10 x 60	**32614**	8 x MUD 10 x 60	9

metal universal plug

ceiling nail - DN

Type	Art.No.	Package contents	pcs./UK
Blister card			
DN 35	**36165**	6 x DN 35	9

ceiling nail

ISO plug - ID

Type	Art.No.	Package contents	pcs./UK
Blister card			
ID 50	**36172**	2 x ID 50	15
ID 85	**36173**	2 x ID 85	15

ISO plug

self-service range - for board materials and cavities

hollow wall plug - KHD
hollow wall plug with chipboard screw - KHD SP
hollow wall plug with angle hook - KHD WH

Type	Art.No.	Package contents	pcs./UK
Blister card			
KHD	**36142**	5 x KHD 10 x 50	9
KHD SP	**33397**	4 x KHD 10 x 50 / 4 x Chipboard screw 4 x 60	9
KHD WH	**36143**	2 x KHD 10 x 50 / 2 x angle hook 4 x 40	9

hollow wall plug with chipboard screw/ angle hook

plasterboard plug - GKD SW
plasterboard plug with Chipboard screw - GKD SWS
plasterboard plug with angle hook - GKD SW WH

Type	Art.No.	Package contents	pcs./UK
Blister card			
GKD	**30706**	15 x GKD	9
GKD SW	**30707**	10 x GKD, 1 x setting tool	9
GKD SWS	**32600**	5 x GKD / 1 x setting tool / 5 x Chipboard screw 4,0 x 40	9
GKD SW WH	**36141**	5 x GKD / 1 x setting tool / 5 x angle hook 4,0 x 40	9

plasterboard plug with setting tool/ chipboard screw/angle hook

metal plasterboard plug - GKD M
metal plasterboard plug with Chipboard screw - GKD M SP

Type	Art.No.	Package contents	pcs./UK
Blister card			
GKD M	**35144**	15 x GKD M	9
GKD M SP	**35342**	3 x GKD M / 3 x Chipboard screw 4,0 x 40	9
GKD M SP	**35343**	10 x GKD M / 10 x Chipboard screw 4,0 x 40	9

Gipskartondübel with Chipboard screw

metal hollow wall fixing - MHD

Type	Art.No.	Package contents	pcs./UK
Blister card			
MHD 4 x 12	**32604**	4 x MHD 4 x 12	9
MHD 4 x 24	**32605**	4 x MHD 4 x 24	9
MHD 5 x 12	**30755**	4 x MHD 5 x 12	9
MHD 5 x 16	**32606**	4 x MHD 5 x 16	9
MHD 5 x 24	**32607**	4 x MHD 5 x 24	9
MHD 6 x 12	**30758**	4 x MHD 6 x 12	9
MHD 6 x 16	**32608**	4 x MHD 6 x 16	9
MHD 6 x 24	**32609**	4 x MHD 6 x 24	9

metal hollow wall fixing

metal hollow wall fixing - MHD WH/Oe/RH

Type	Art.No.	Package contents	pcs./UK
Blister card			
MHD 6 x 16 WH	**35344**	4 x MHD 6 x 16 / 4 x angle hook M 6 x 60	9
MHD 6 x 16 Oe	**36144**	4 x MHD 6 x 16 / 4 x eye screw M 6 x 60	9
MHD 6 x 16 RH	**36145**	4 x MHD 6 x 16 / 4 x round hook M 6 x 60	9

metal hollow wall fixing eye screw / angle hook / round hook

self-service range - for board materials and cavities

hollow wall wash basin fixing - WTB MHD

Type	Art.No.	Package contents	pcs./UK
Poly bag blister			
WTB 8 x 16 MHD	**30770**	2 x threaded stud M 8x115, 2 x MHD 8x16, 2 x hexagonal nut M 8, 2 x washer M 8, 2 x excenter nylon flange bush M 8	12
WTB 8 x 24 MHD	**30771**	2 x threaded stud M 8x115, 2 x MHD 8x24, 2 x hexagonal nut M 8, 2 x washer M 8, 2 x excenter nylon flange bush M 8	12

hollow wall wash basin fixing

installation tool metal hollow wall fixing - HMZ

Type	Art.No.	Package contents	pcs./UK
Poly bag blister			
HMZ	**30784**	1 x installation tool metal hollow wall fixing	1

installation tool metal hollow wall fixing

spring toggle - FK

Type	Art.No.	Package contents	pcs./UK
Blister card			
FK M 3 x 90	**34368**	2 x FK M 3 x 90	9
FK M 4 x 100	**30781**	2 x FK M 4 x 100	9
Poly bag blister			
FK M 5 x 100	**36174**	2 x FK M 5 x 100	15

spring toggle

spring toggle with rimmed brass nut - FKB

Type	Art.No.	Package contents	pcs./UK
Blister card			
FKB M 3 x 90	**33686**	9 x FKB M 3 x 90	4
FKB M 3 x 90	**33688**	2 x FKB M 3 x 90	9
FKB M 4 x 100	**33687**	8 x FKB M 4 x 100	4
FKB M 4 x 100	**36001**	2 x FKB M 4 x 100	9

spring toggle with rimmed brass nut

spring toggle with round hook - FKH

Type	Art.No.	Package contents	pcs./UK
Blister card			
FKH M 3 x 50	**33689**	2 x FKH M 3 x 50	9
FKH M 4 x 70	**30782**	2 x FKH M 4 x 70	9
Poly bag blister			
FKH M 5 x 70	**36175**	2 x FKH M 5 x 70	15

spring toggle with round hook

self-service range - for concrete

stud anchor S-KA

Type	Art.No.	Package contents	pcs./UK
Blister card			
S-KA 8/10	**36838**	2 x S-KA 8/10	9
S-KA 10/10	**36839**	2 x S-KA 10/10	9
S-KA 12/20	**36840**	2 x S-KA 12/20	9

stud anchor S-KA

Stud anchor with individual tag BU

type	ref.-no.	pcs./UK
BU 12-85/180 E	**37450**	25
BU 12-105/200 E	**37451**	25
BU 12-145/240 E	**37452**	25
BU 12-160/255 E	**37453**	20
BU 12-190/285 E	**37454**	20
BU 16-100/220 E	**37455**	10
BU 16-130/250 E	**37456**	10
BU 16-165/285 E	**37457**	10

Stud anchor BU

Stud anchor made of galvanized steel with individual tag S-KA

Type	Art.No.	pcs./UK
S-KA 10/10 E	**36828**	50
S-KA 10/30 E	**36829**	25
S-KA 10/55 E	**36830**	25
S-KA 10/80 E	**36831**	25
S-KA 12/5 E	**36832**	25
S-KA 12/20 E	**36833**	25
S-KA 12/35 E	**36834**	25
S-KA 12/65 E	**36835**	25
S-KA 12/105 E	**36836**	25
S-KA 16/20 E	**36837**	10

stud anchor S-KA

Stud anchor made of stainless steel, A4 with individual tag

Type	Art.No.	pcs./UK
S-KAH 10/10 A4 E	**36861**	50
S-KAH 12/5 A4 E	**36862**	25
S-KAH 12/20 A4 E	**36863**	25

stud anchor S-KAH

fixing technology

Your dealer:

KEW Kunststofferzeugnisse GmbH Wilthen
Dresdener Straße 19
02681 Wilthen
PF 1155 / PLZ 02679

fon: 03592 / 38 53 - 0
fax: 03592 / 38 53 51
www.kew-werke.de
e-mail: info@kew-werke.de

KEW Quality

KEW DÜBEL

pipe clamp with individual tag RS

type	ref.-no.	pcs./UK
RS PRAKTIC 3/8" E	**37442**	100
RS PRAKTIC 1/2" E	**37443**	100
RS PRAKTIC 3/4" E	**37444**	100
RS PRAKTIC 1" E	**37445**	100
RS PRAKTIC 1 1/4" E	**37446**	100
RS PRAKTIC 1 1/2" E	**37447**	100
RS PRAKTIC 2" E	**37448**	50
RS PRAKTIC 2 1/2" E	**37449**	50

pipe clamp

pipe clamp RS

Type	Art.No.	Package contents	pcs./UK
Poly bag blister			
RS Practic 3/8"	**35043**	2 x RS 3/8"	12
RS Practic 1/2"	**35044**	2 x RS 1/2"	12
RS Practic 3/4"	**35045**	2 x RS 3/4"	12
RS Practic 1"	**35046**	2 x RS 1"	12
Liegebeutel			
RS Practic 3/8"	**35039**	10 x RS 3/8"	20
RS Practic 1/2"	**35040**	10 x RS 1/2"	20
RS Practic 3/4"	**35041**	10 x RS 3/4"	20
RS Practic 1"	**35042**	10 x RS 1"	20

pipe clamp

stud screw STS

Type	Art.No.	Package contents	pcs./UK
Poly bag blister			
STS 8 x 100	**36460**	4 x STS 8 x 100	15
STS 8 x 120	**36461**	4 x STS 8 x 120	15
STS 10 x 120	**36462**	4 x STS 10 x 120	15
STS 10 x 140	**36463**	4 x STS 10 x 140	15

stud screw

self-service range - electrical fixings

pipe clamp plastic - RS M

Type	Art.No.	Package contents	pcs./UK
Poly bag blister			
RS M 16	**37040**	10 x RS M 16	
RS M 20	**37041**	8 x RS M 20	
RS M 25	**37042**	6 x RS M 25	
RS M 32	**37043**	4 x RS M 32	
RS M 40	**37044**	2 x RS M 40	

pipe clamp plastic

cable strap - SS

Type	Art.No.	Package contents	pcs./UK
Poly bag blister			
SS 3/13	**37045**	15 x SS 3/13	
SS 8/28	**37046**	10 x SS 8/28	

cable strap

nail disk - NSB

Type	Art.No.	Package contents	pcs./UK
Poly bag blister			
NSB 27/40	**37047**	20 x NSB 27 / 20 x Nagel 2,0 x 40	
NSB 27/50	**37048**	20 x NSB 27 / 20 x Nagel 2,0 x 50	

nail disk

nail clamp - NS

Type	Art.No.	Package contents	pcs./UK
Poly bag blister			
NS 3 - 5/18	**37051**	50 x NS 3- 5 / 50 x Nagel 1,7 x 18	
NS 5 - 7/18	**37052**	50 x NS 5- 7 / 50 x Nagel 2,0 x 18	
NS 5 - 7/23	**37053**	50 x NS 5- 7 / 50 x Nagel 2,0 x 23	
NS 7 - 12/18	**37054**	40 x NS 7-12 / 40 x Nagel 2,0 x 18	
NS 7 - 12/30	**37055**	40 x NS 7-12 / 40 x Nagel 2,0 x 30	
NS 10 - 14/30	**37056**	40 x NS 10-14 / 40 x Nagel 2,0 x 30	

nail clamp

Notes